1.2MHz Boost DC/DC Converter in SOT-23

June 2000

FEATURES

- **1.2MHz Switching Frequency**
- **High Output Voltage: Up to 34V**
- Wide Input Range: 2.6V to 16V
- Low V_{CESAT} Switch: 400mV at 1A
- Uses Small Surface Mount Components
- 5V at 480mA from 3.3V Input
- 12V at 300mA from 5V Input
- Low Shutdown Current: <1µA
- 5-Lead SOT-23 Package
- Pin-for-Pin Compatible with the LT1613

APPLICATIONS

- Digital Cameras
- Cordless Phones
- Battery Backup
- LCD Bias
- Medical Diagnostic Equipment
- Local 5V or 12V Supply
- External Modems
- PC Cards
- xDSL Power Supply

DESCRIPTION

The LT®1930 is the industry's highest power SOT-23 switching regulator. Its internal 1A, 36V switch allows high current outputs to be generated in a small footprint. Intended for space-conscious applications, the LT1930 switches at 1.2MHz, allowing the use of tiny, low cost capacitors and inductors 2mm or less in height. Multiple output power supplies can now use a separate regulator for each output voltage, replacing cumbersome quasi-regulated approaches using a single regulator and custom transformers.

A constant frequency, internally compensated, current mode PWM architecture results in low, predictable output noise that is easy to filter. Low ESR ceramic capacitors can be used on the output, further reducing noise to the millivolt level. The high voltage switch on the LT1930 is rated at 36V, making the device ideal for boost converters up to 34V as well as for single-ended primary inductance converter (SEPIC) and flyback designs. The device can generate 5V at up to 480mA from a 3.3V supply or 5V at 300mA from four alkaline cells in a SEPIC design.

The LT1930 is available in the 5-lead SOT-23 package.

LT, LTC and LT are registered trademarks of Linear Technology Corporation.

TYPICAL APPLICATION

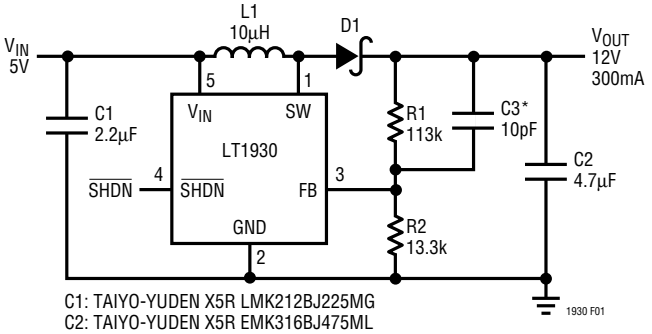

C1: TAIYO-YUDEN X5R LMK212BJ225MG
C2: TAIYO-YUDEN X5R EMK316BJ475ML
D1: ON SEMICONDUCTOR MBR0520
L1: SUMIDA CR43-100
*OPTIONAL

Figure 1. 5V to 12V, 300mA Step-Up DC/DC Converter

Efficiency

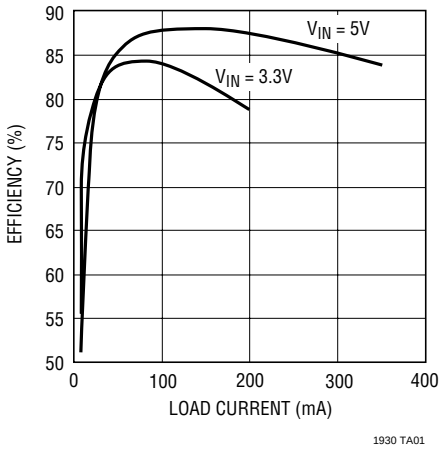

Information furnished by Linear Technology Corporation is believed to be accurate and reliable. However, no responsibility is assumed for its use. Linear Technology Corporation makes no representation that the interconnection of its circuits as described herein will not infringe on existing patent rights.

ABSOLUTE MAXIMUM RATINGS

(Note 1)

V_{IN} Voltage 16V
SW Voltage ..... –0.4V to 36V
FB Voltage 2.5V
Current Into FB Pin ..... ±1mA
$\overline{SHDN}$ Voltage 10V
Maximum Junction Temperature ..... 125°C
Operating Temperature Range (Note 2) .. –40°C to 85°C
Storage Temperature Range ..... –65°C to 150°C
Lead Temperature (Soldering, 10 sec) ..... 300°C

PACKAGE/ORDER INFORMATION

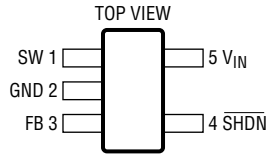

S5 PACKAGE
5-LEAD PLASTIC SOT-23

T_{JMAX} = 125°C, θ_{JA} = 256°C/W

ORDER PART NUMBER
LT1930ES5
S5 PART MARKING
LTKS

Consult factory for Industrial and Military grade parts.

ELECTRICAL CHARACTERISTICS

The ● denotes specifications which apply over the full operating temperature range, otherwise specifications are T_A = 25°C. V_{IN} = 3V, $V_{\overline{SHDN}}$ = V_{IN} unless otherwise noted. (Note 2)

PARAMETER	CONDITIONS		MIN	TYP	MAX	UNITS
Minimum Operating Voltage				2.45	2.6	V
Maximum Operating Voltage					16	V
Feedback Voltage			1.240	1.255	1.270	V
		●	1.230		1.280	V
FB Pin Bias Current		●		120	360	nA
Quiescent Current	$V_{\overline{SHDN}}$ = 1.5V, Not Switching			4.2	6	mA
Quiescent Current in Shutdown	$V_{\overline{SHDN}}$ = 0V, V_{IN} = 3V			0.01	1	µA
Reference Line Regulation	2.6V ≤ V_{IN} ≤ 16V			0.01	0.05	%/V
Switching Frequency			1	1.2	1.4	MHz
		●	0.85		1.6	MHz
Maximum Duty Cycle		●	82	90		%
Switch Current Limit	(Note 3)		1	1.2	2	A
Switch V_{CESAT}	I_{SW} = 900mA			350	500	mV
Switch Leakage Current	V_{SW} = 5V			0.01	1	µA
$\overline{SHDN}$ Input Voltage High			2.4			V
$\overline{SHDN}$ Input Voltage Low					0.5	V
$\overline{SHDN}$ Pin Bias Current	$V_{\overline{SHDN}}$ = 3V			16	32	µA
	$V_{\overline{SHDN}}$ = 0V			0.01	0.1	µA

Note 1: Absolute Maximum Ratings are those values beyond which the life of a device may be impaired.

Note 2: The LT1930ES5 is guaranteed to meet performance specifications from 0°C to 70°C. Specifications over the –40°C to 85°C operating temperature range are assured by design, characterization and correlation with statistical process controls.

Note 3: Current limit guaranteed by design and/or correlation to static test.

TYPICAL PERFORMANCE CHARACTERISTICS

Quiescent Current

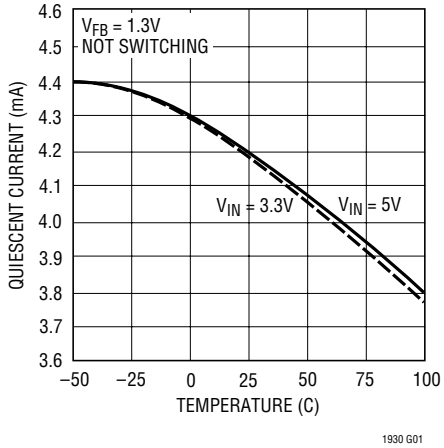

Feedback Pin Voltage

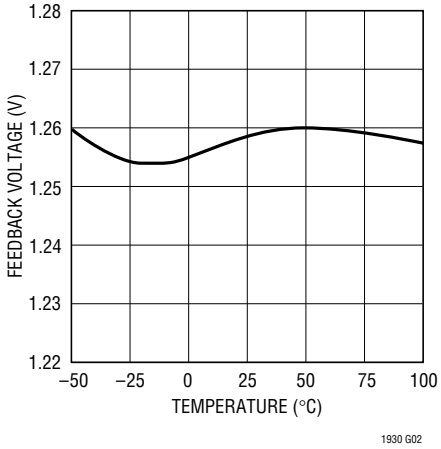

Shutdown Pin Current

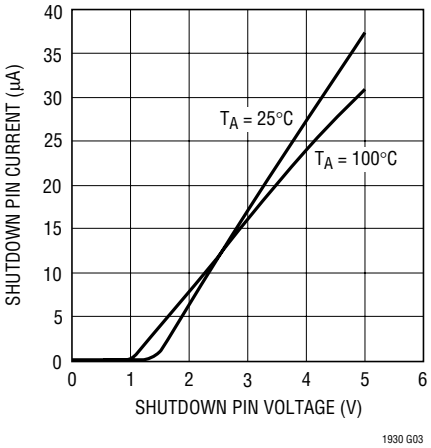

Current Limit

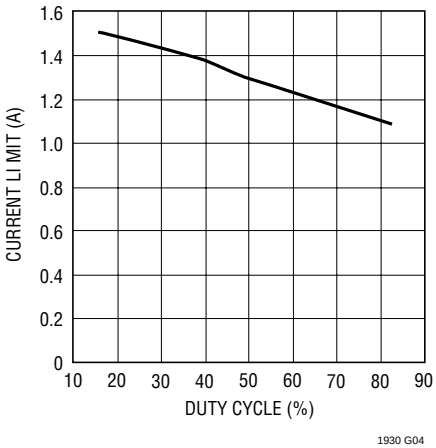

Switch Saturation Voltage

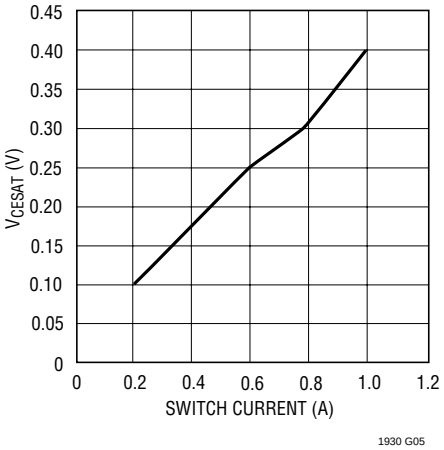

Oscillator Frequency

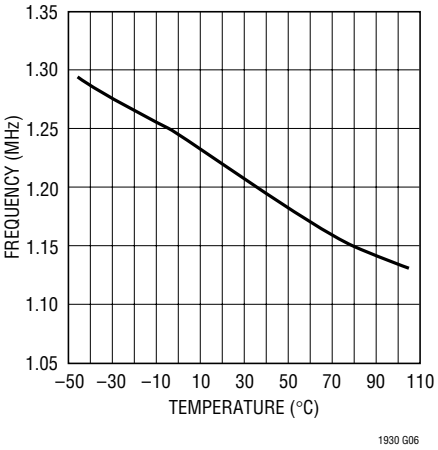

PIN FUNCTIONS

SW (Pin 1): Switch Pin. Connect inductor/diode here. Minimize trace area at this pin to reduce EMI.

GND (Pin 2): Ground. Tie directly to local ground plane.

FB (Pin 3): Feedback Pin. Reference voltage is 1.255V. Connect resistive divider tap here. Minimize trace area at FB. Set V_{OUT} according to V_{OUT} = 1.255V(1 + R1/R2).

$\overline{SHDN}$ (Pin 4): Shutdown Pin. Tie to 2.4V or more to enable device. Ground to shut down.

V_{IN} (Pin 5): Input Supply Pin. Must be locally bypassed.

BLOCK DIAGRAM

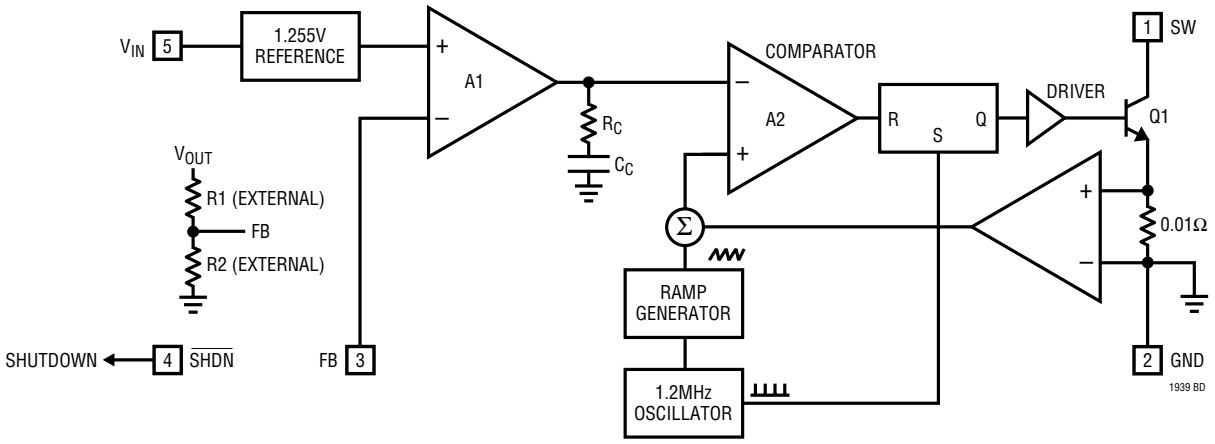

Figure 2. Block Diagram

OPERATION

The LT1930 uses a constant frequency, current mode control scheme to provide excellent line and load regulation. Operation can be best understood by referring to the Block Diagram in Figure 2. At the start of each oscillator cycle, the SR latch is set, turning on the power switch Q1. A voltage proportional to the switch current is added to a stabilizing ramp and the resulting sum is fed into the positive terminal of the PWM comparator, A2. When this voltage exceeds the level at the negative input of A2, the SR latch is reset, turning off the power switch. The level at the negative input of A2 is set by error amplifier A1, and is simply an amplified version of the difference between the feedback voltage and the reference voltage of 1.255V. In this manner, the error amplifier sets the correct peak current level to keep the output in regulation. If the error amplifier's output increases, more current is delivered to the output; if it decreases, less current is delivered. One function present in the LT1930 but not shown in Figure 2 is current limit. The switch current is constantly monitored and not allowed to exceed the nominal value of 1A. If the switch current reaches 1A, the SR latch is reset regardless of the state of comparator A2. This current limit protects the power switch as well as the external components connected to the LT1930.

APPLICATIONS INFORMATION

Inductor Selection

Several inductors that work well with the LT1930 are listed in Table 1, although there are many other manufacturers and devices that can be used. Consult each manufacturer for more detailed information and for their entire selection of related parts, as many different sizes and shapes are available. Ferrite core inductors should be used to obtain the best efficiency, as core losses at 1.2MHz are much lower for ferrite cores than for the cheaper powdered-iron cores. Choose an inductor that can handle at least 1A without saturating, and ensure that the inductor has a low DCR (copper wire resistance) to minimize I^2R power losses. A 4.7µH or 10µH inductor will be the best choice for most LT1930 designs. Note that in some applications, the current handling requirements of the inductor can be lower, such as in the SEPIC topology where each inductor only carries one-half of the total switch current.

APPLICATIONS INFORMATION

Table 1. Recommended Inductors

PART	L (μH)	MAX DCR mΩ	HEIGHT (mm)	VENDOR
CDRH5D18-4R1 CDRH5D18-100 CR43-4R7 CR43-100	4.1 10 4.7 10	57 124 109 182	2.0 2.0 3.5 3.5	Sumida (847) 956-0666 www.sumida.com
DS1608-472 DS1608-103	4.7 10	60 75	2.9 2.9	Coilcraft (847) 639-6400 www.coilcraft.com
D52LC-4R7M D52LC-100M	4.7 10	84 137	2.0 2.0	Toko (408) 432-8282 www.tokoam.com

Capacitor Selection

Low ESR (equivalent series resistance) capacitors should be used at the output to minimize the output ripple voltage. Multilayer ceramic capacitors are an excellent choice, as they have extremely low ESR and are available in very small packages. X5R dielectrics are preferred, followed by X7R, as these materials retain the capacitance over wide voltage and temperature ranges. A 4.7μF to 10μF output capacitor is sufficient for most applications, but systems with very low output current may need only a 1μF or 2.2μF output capacitor. Solid tantalum or OS-CON capacitors can be used, but they will occupy more board area than a ceramic and will have a higher ESR. Always use a capacitor with a sufficient voltage rating.

Ceramic capacitors also make a good choice for the input decoupling capacitor, and should be placed as close as possible to the LT1930. A 1μF to 4.7μF input capacitor is sufficient for most applications. Table 2 shows a list of several ceramic capacitor manufacturers. Consult the manufacturers for detailed information on their entire selection of ceramic parts.

Table 2. Ceramic Capacitor Manufacturers

Taiyo-Yuden	(408) 573-4150	www.t-yuden.com
AVX	(803) 448-9411	www.avxcorp.com
Murata	(714) 852-2001	www.murata.com

The decision to use either low ESR (ceramic) capacitors or the higher ESR (tantalum or OS-CON) capacitors can affect the stability of the overall system. The ESR of any capacitor, along with the capacitance itself, contributes a zero to the system. For the tantalum and OS-CON capacitors, this zero is located at a lower frequency due to the higher value of the ESR, while the zero of a ceramic capacitor is at a much higher frequency and can generally be ignored.

A phase lead zero can be intentionally introduced by placing a capacitor (C3) in parallel with the resistor (R1) between V_{OUT} and V_{FB} as shown in Figure 1. The frequency of the zero is determined by the following equation.

$$f_Z = \frac{1}{2\pi \bullet R1 \bullet C3}$$

By choosing the appropriate values for the resistor and capacitor, the zero frequency can be designed to slightly improve the phase margin of the overall converter. The typical target value for the zero frequency is between 50kHz to 150kHz. Figure 3 shows the transient response of the step-up converter from Figure 1 without the phase lead capacitor C3. The phase margin is reduced as evidenced by more ringing in both the output voltage and inductor current. A 10pF capacitor for C3 results in better phase margin, which is revealed in Figure 4 as a more damped response and less overshoot. Figure 5 shows the transient response when a 33μF tantalum capacitor with no phase lead capacitor is used on the output. The higher output voltage ripple is revealed in the upper waveform as a set of double lines. The transient response is not greatly improved which implies that the ESR zero frequency is too high to increase the phase margin.

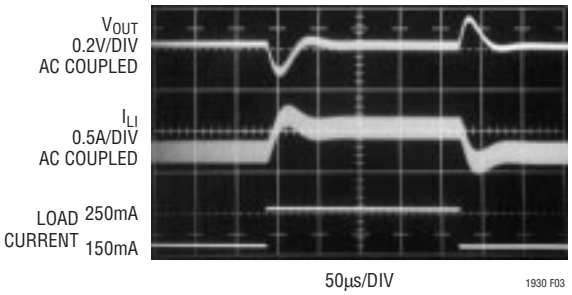

Figure 3. Transient Response of Step-Up Converter Without Phase Lead Capacitor

APPLICATIONS INFORMATION

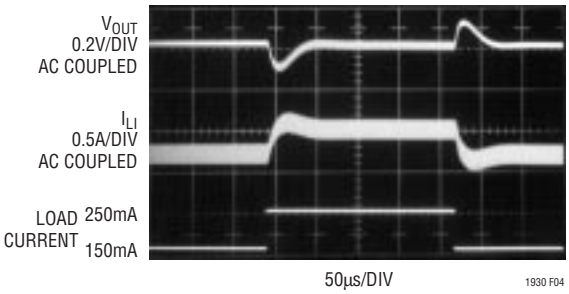

Figure 4. Transient Response of Step-Up Converter with 10pF Phase Lead Capacitor

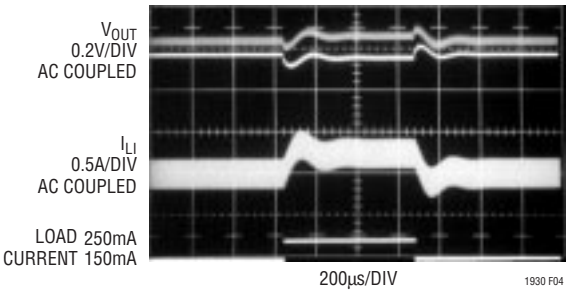

Figure 5. Transient Response of Step-Up Converter with 33µF Tantalum Output Capacitor and No Phase Lead Capacitor

Diode Selection

A Schottky diode is recommended for use with the LT1930. The ON Semiconductor MBR0520 is a very good choice. Where the input to output voltage differential exceeds 20V, use the MBR0530 (a 30V diode). These diodes are rated to handle an average forward current of 0.5A. In applications where the average forward current of the diode exceeds 0.5A, a Microsemi UPS5817 rated at 1A is recommended.

Setting Output Voltage

To set the output voltage, select the values of R1 and R2 (see Figure 1) according to the following equation:

$$R1 = R2\left(\frac{V_{OUT}}{1.255V} - 1\right)$$

A good value for R2 is 13.3k which sets the current in the resistor divider chain to 1.255V/13.3k = 94.4µA.

Layout Hints

The high speed operation of the LT1930 demands careful attention to board layout. You will not get advertised performance with careless layout. Figure 6 shows the recommended component placement. Make the ground pin copper area large. This helps to lower the die temperature.

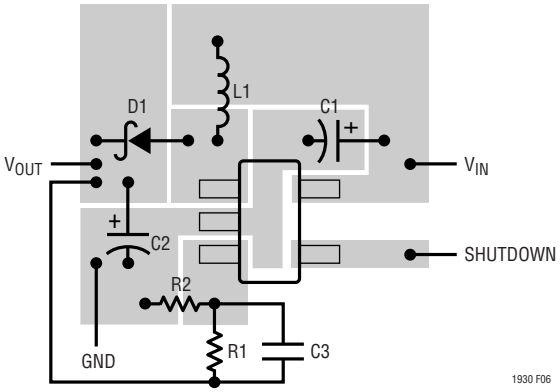

Figure 6. Suggested Layout

Driving $\overline{SHDN}$ Above 10V

The maximum voltage allowed on the $\overline{SHDN}$ pin is 10V. If you wish to use a higher voltage, you must place a resistor in series with $\overline{SHDN}$. A good value is 121k. Figure 7 shows a circuit where V_{IN} = 16V and $\overline{SHDN}$ is obtained from V_{IN}. The voltage on the $\overline{SHDN}$ pin is kept below 10V.

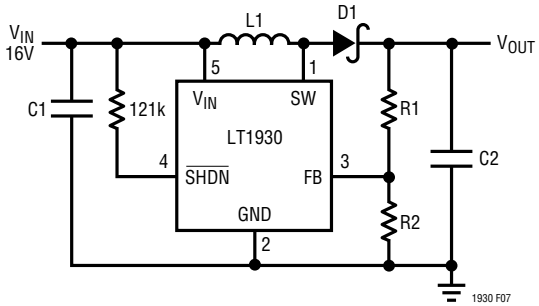

Figure 7. Keeping $\overline{SHDN}$ Below 10V

TYPICAL APPLICATIONS

4-Cell to 5V SEPIC Converter

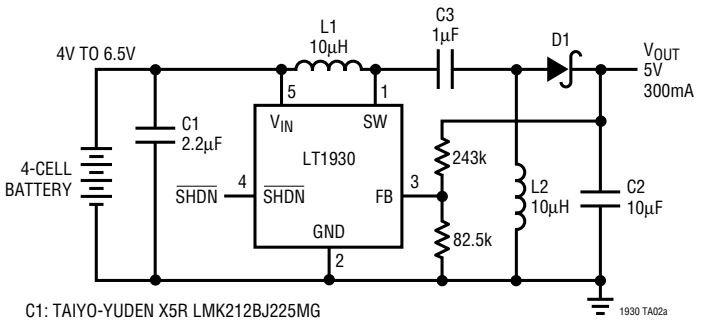

C1: TAIYO-YUDEN X5R LMK212BJ225MG
C2: TAIYO-YUDEN X5R JMK316BJ106ML D1: ON SEMICONDUCTOR MBR0520
C3: TAIYO-YUDEN X5R LMK212BJ105MG L1: MURATA LQH3C100K24

Efficiency

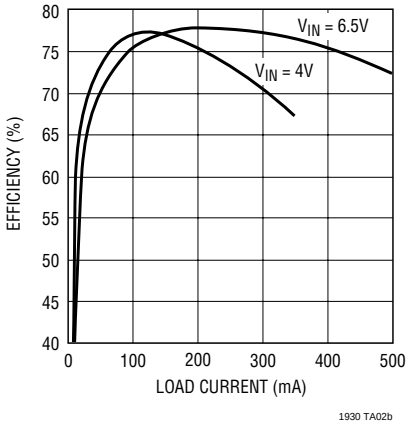

4-Cell to 5V SEPIC Converter with Coupled Inductors

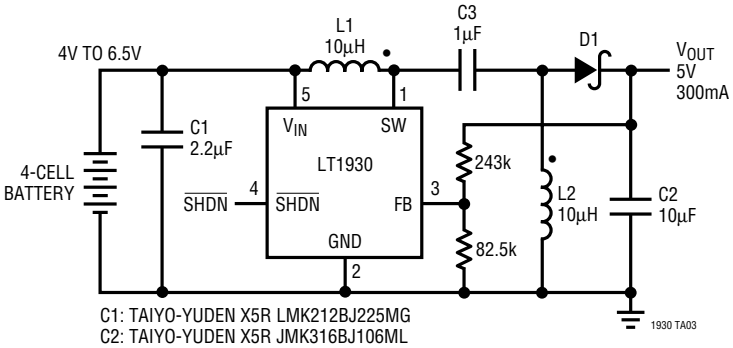

C1: TAIYO-YUDEN X5R LMK212BJ225MG
C2: TAIYO-YUDEN X5R JMK316BJ106ML
C3: TAIYO-YUDEN X5R LMK212BJ105MG
D1: ON SEMICONDUCTOR MBR0520
L1, L2: SUMIDA CLS62-100

PACKAGE DESCRIPTION

Dimensions in inches (millimeters) unless otherwise noted.

S5 Package
5-Lead Plastic SOT-23
(LTC DWG # 05-08-1633)

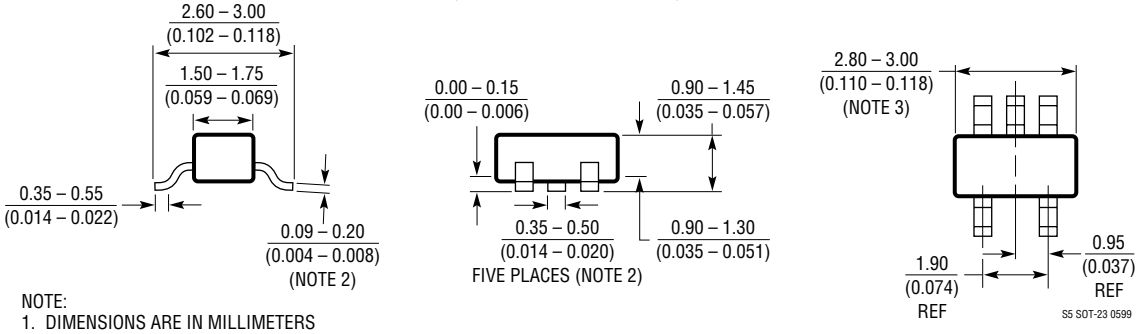

NOTE:
1. DIMENSIONS ARE IN MILLIMETERS
2. DIMENSIONS ARE INCLUSIVE OF PLATING
3. DIMENSIONS ARE EXCLUSIVE OF MOLD FLASH AND METAL BURR
4. MOLD FLASH SHALL NOT EXCEED 0.254mm
5. PACKAGE EIAJ REFERENCE IS SC-74A (EIAJ)

TYPICAL APPLICATIONS

5V to 28V Boost Converter

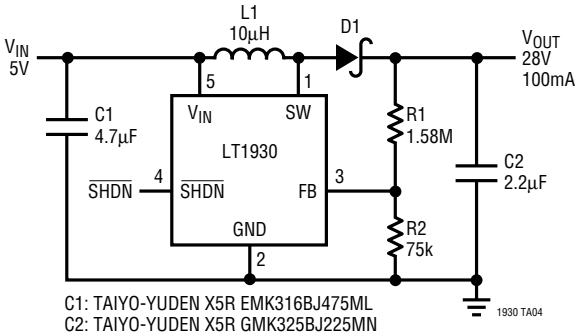

C1: TAIYO-YUDEN X5R EMK316BJ475ML
C2: TAIYO-YUDEN X5R GMK325BJ225MN
D1: ON SEMICONDUCTOR MBR0530
L1: SUMIDA CR43-100

Boost Converter with Reverse Battery Protection

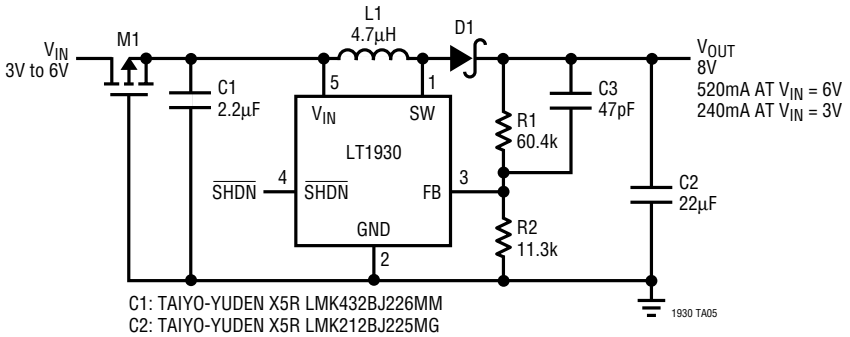

C1: TAIYO-YUDEN X5R LMK432BJ226MM
C2: TAIYO-YUDEN X5R LMK212BJ225MG
D1: ON SEMICONDUCTOR MBR0520
L1: SUMIDA CR43-4R7
M1: SILICONIX Si6433DQ

RELATED PARTS

PART NUMBER	DESCRIPTION	COMMENTS
LT1307	Single Cell Micropower 600kHz PWM DC/DC Converter	3.3V at 75mA from Single Cell, MSOP Package
LT1316	Burst Mode™ Operation DC/DC Converter with Programmable Current Limit	1.5V Minimum, Precise Control of Peak Current Limit
LT1317	2-Cell Micropower DC/DC Converter with Low-Battery Detector	3.3V at 200mA from 2 Cells, 600kHz Fixed Frequency
LT1610	Single Cell Micropower DC/DC Converter	3V at 30mA from 1V, 1.7MHz Fixed Frequency
LT1611	Inverting 1.4MHz Switching Regulator in 5-Lead SOT-23	–5V at 150mA from 5V Input, Tiny SOT-23 Package
LT1613	1.4MHz Switching Regulator in 5-Lead SOT-23	5V at 200mA from 3.3V Input, Tiny SOT-23 Package
LT1615	Micropower Constant Off-Time DC/DC Converter in 5-Lead SOT-23	20V at 12mA from 2.5V, Tiny SOT-23 Package
LT1617	Micropower Inverting DC/DC Converter in 5-Lead SOT-23	–15V at 12mA from 2.5V Input, Tiny SOT-23 Package
LTC®1624	High Efficiency, N-Channel Switching Regulator Controller	95% DC, 3.5V to 36V V_{IN} Range, SO-8

Burst Mode is a trademark of Linear Technology Corporation.

Linear Technology Corporation
1630 McCarthy Blvd., Milpitas, CA 95035-7417
(408)432-1900 • FAX: (408) 434-0507 • www.linear-tech.com
1930i LT/TP 0600 4K • PRINTED IN USA
© LINEAR TECHNOLOGY CORPORATION 2000