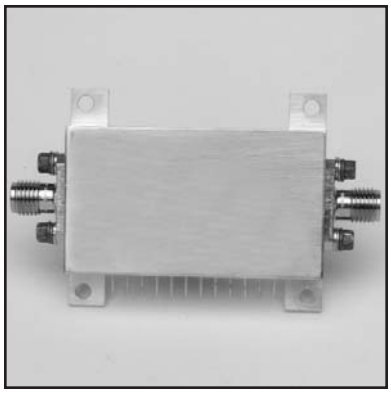

MODEL NUMBER CDA0867

GaAs 7 Section Attenuator

FEATURES

- 10 - 1000 MHz
- 3 mA, +5 VDC
- 17 nSec Transition Time
- 27 nSec Switching Speed
- 0.5 dB LSB, 63.5 dB Range
- See DA0887 for 38 Pin DIP Version
- Replaceable SMA Connectors
- 54 mV Transients
- TTL Control

7 BIT

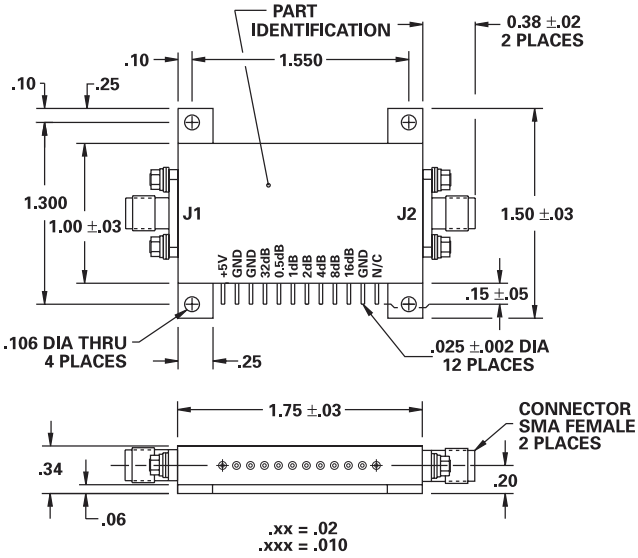

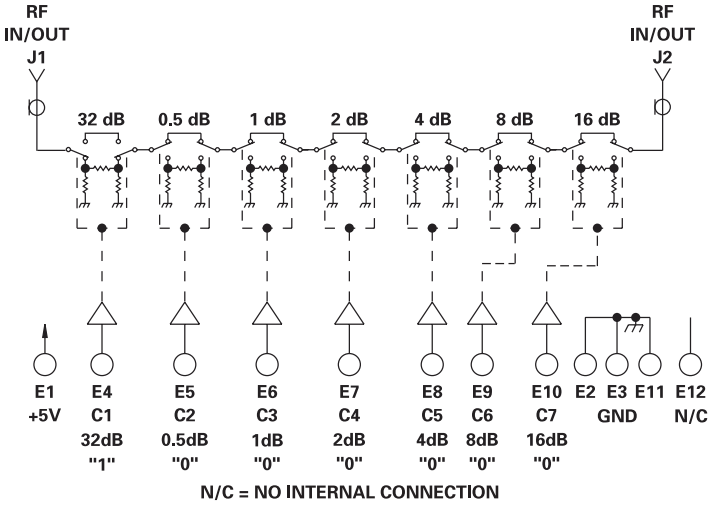

TYPICAL PERFORMANCE

at 25°C

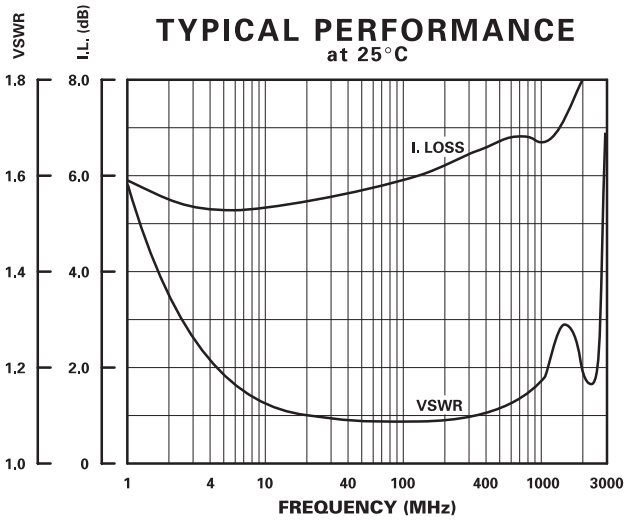

GUARANTEED PERFORMANCE

Parameter		Min	Typ	Max	Units	Conditions
Operating Frequency		10		1000	MHz	
DC Current			3	7	mA	At +5 VDC Supply
Control Type			TTL			7 Line Logic "0" = Thru Logic "1" = Attenuation
Control Current	*High*		0	±20	µA	VIH = +2.7 V
	Low		0	±20	µA	VIL = +0.5 V
Insertion Loss			6.4	8.0	dB	10 - 300 MHz
			6.8	9.0	dB	300 - 1000 MHz
Phase Change			±3	±5	DEG	10 - 500 MHz
Vs. Attenuation			±4	±8	DEG	500 - 1000 MHz (up to 15.5 dB of Atten.)
Attenuation	*LSB*		0.5		dB	
	Range	0		63.5	dB	0.5, 1, 2, 4, 8, 16, 32
	Accuracy				dB	± (0.25 dB +2% of Atten. Setting in dB)
VSWR			1.18/1	1.35/1		
Impedance			50		OHMS	
Switching Speed			27	35	nSec	50% TTL to 90% / 10% RF
Transition (Rise/Fall) Time			17		nSec	90% / 10% or 10% / 90% RF
Switching (Video) Transients			54		mV	Peak Value
Intercept Points	*2nd*		+65		dBm	70 MHz / 50 MHz
	3rd		+38		dBm	35 MHz / 50 MHz
RF Power	*Operate*		+10	+8	dBm	0.1 dB Comp. 10 - 50 MHz
			+13	+10	dBm	50 - 1000 MHz
	No Damage			+24	dBm	
Operating Temperature		-55	+25	+125	°C	TA