# Monolithic crystal filter
# MQF70.0-1400/02

**Application**

- 4 pol filter
- i.f.- filter
- use in mobile and stationary transceivers

| Limiting values | | Unit | Value |
|---|---|---|---|
| Center frequency | fo | MHz | 70.0 |
| Insertion loss | | dB | ≤ 4.0 |
| Pass band at 3.0 dB | | kHz | ± 7.00 |
| Ripple in pass band | fo ± 4.50 kHz | dB | ≤ 1.0 |
| Stop band attenuation | fo ± 12.5 kHz | dB | ≥ 10 |
| | fo ± 90 kHz | dB | > 80 |
| Alternate attenuation | fo ± 0.09...50MHz | dB | > 60 |
| Spurious responses | | dB | > 40 |
| Group delay distortion | fo ± 7.0 kHz | µs | < 30 |
| Terminating impedance Z | | | |
| R1 \|\| C1 | | Ohm/pF | 50 \|\| 0 |
| R2 \|\| C2 | | Ohm/pF | 50 \|\| 0 |
| Operating temp. range | | ° C | -20... +85 |

**Characterstics MQF70.0-1400/02**

**Pass band**

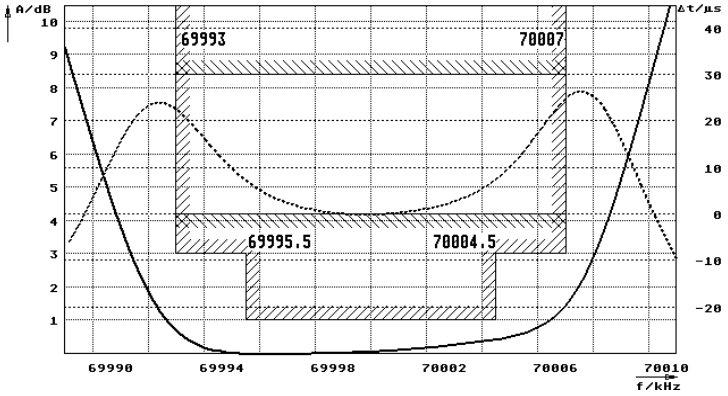


**Stop band**

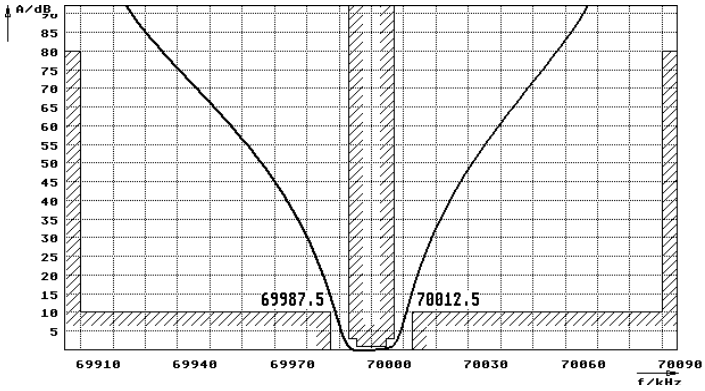


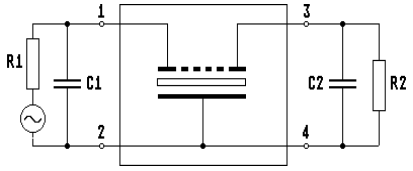


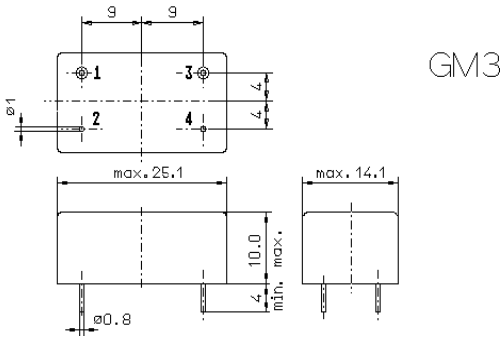


Pin connections: 1 Input
2 Input-E
3 Output
4 Output-E

**TELE FILTER Zweigniederlassung der DOVER EUROPE GMBH** 30.10.00
Potsdamer Str. 18 D- 14513 Teltow ☎ (+49)03328-4784-10 ; Fax (+49)03328-4784-30 http:\\www.telefilter.com