CERAMIC SURFACE MOUNT MICROPROCESSOR CRYSTAL

ABMM

7.0 x 5.0 x 1.3 mm

Pb RoHS Compliant

FEATURES:

- Suitable for reflow
- Low in height - suitable for thin equipment
- AT-strip cut offers a tight tolerance & stability

APPLICATIONS:

- Computers, Modems, Microprocessors
- Communication, Test equipment
- PCMCIA

STANDARD SPECIFICATIONS:

PARAMETERS	
ABRACON P/N	ABMM
Frequency Range	6.0 MHz to 125 MHz
Operation Mode	AT (see option) Fundamental 6.0 MHz - 33.0 MHz Third-Overtone for F ~ 33.01 MHz - 125 MHz
Operating Temperature	- 10°C to + 60°C (see options)
Storage Temperature	- 40°C to + 85°C
Frequency Tolerance at +25°C	± 50 ppm max. (see options)
Frequency Stability over the Operating Temp. (Ref to +25°C)	± 50 ppm max. (see Table 1); ± 100 ppm @ -10 °C to + 60° C for Fundamental BT
Equivalent Series Resistance	See Table 1
Shunt Capacitance C_0	7pF max.
Load Capacitance C_L	18pF (see options)
Drive Level	500µW max., 100µW typical
Aging at 25°C Per Year	± 5ppm max.
Insulation Resistance	500MW min at 100Vdc ± 15V

TABLE 1

Frequency (MHz)	ESR (Ω)
6.000 - 11.999(Fund)	70
12.000 - 20.000(Fund)	50
20.000 - 33.000(Fund)	40
33.000 - 125.00(3rd O/T)	80

OPTIONS & PART IDENTIFICATION:

[Left blank if standard]

ABMM - Frequency - □ - R□□□- □ - □ - □ - □ - □

Frequency

XX.XXXX MHz

Load Capacitance

Please specify CL in pF or S for Series

Custom ESR

RXXX (Value in Ω) If it is custom

Operating Temp.

E	0°C ~ +70°C
B	-20°C ~ +70°C
C	-30°C ~ +70°C
N	-30°C ~ +85°C
D	-40°C ~ +85°C

Freq. Tolerance

1	± 10 ppm max.
7	± 15 ppm max.
2	± 20 ppm max.
3	± 25 ppm max.
4	± 30 ppm max.

Freq. Stability

U**	± 10 ppm max.
G***	± 15 ppm max.
X	± 20 ppm max.
W	± 25 ppm max.
Y	± 30 ppm max.
H	± 35 ppm max.

** -10°C TO 60°C only

*** Temp option E and B only

Packaging

Blank	Bulk
T	Tape & Reel

Mode

F	Fund.AT>=33MHz
FB	Fund BT*

(*) Note: ±100ppm max stability from -10ºC to +60ºC only.

30332 Esperanza, Rancho Santa Margarita, California 92688
tel 949-546-8000 | fax 949-546-8001 | www.abracon.com

CERAMIC SURFACE MOUNT MICROPROCESSOR CRYSTAL

ABMM

7.0 x 5.0 x 1.3 mm

Pb RoHS Compliant

OUTLINE DRAWING:

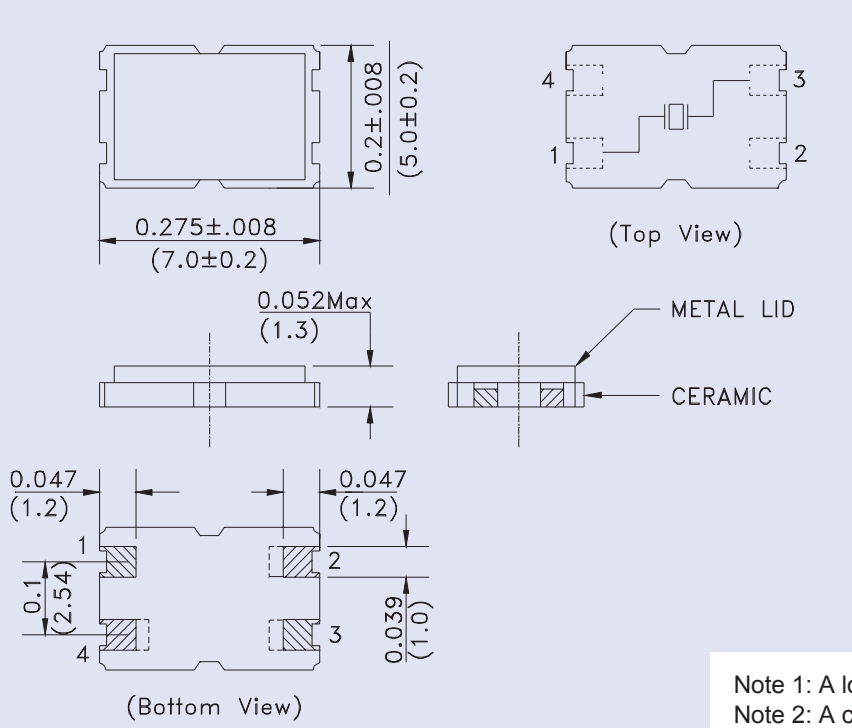

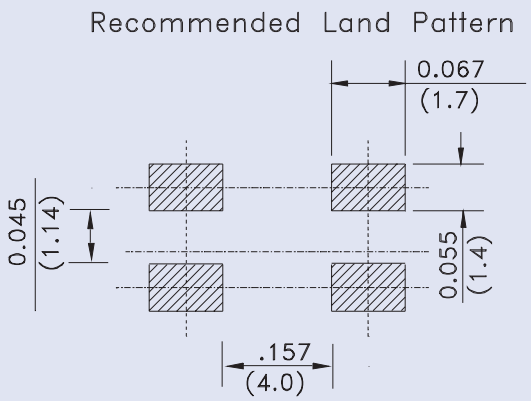

Dimensions: mm

Note 1: A longer pad (1.5mm) may appear on either pad 2, 3, or 4
Note 2: A chamfer of 0.3mm may appear on pad 1 or 2
Note 3: Pads 2 and 4 are connected to the metal lid

TAPE & REEL: Tape and reel 1,000 pcs/reel

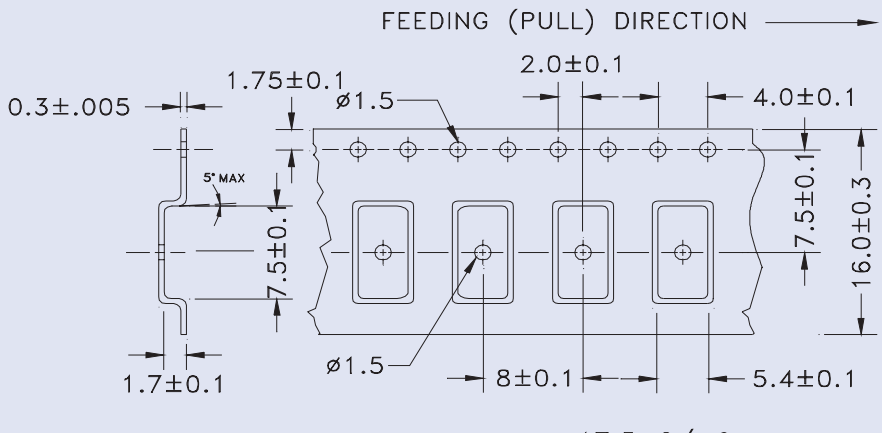

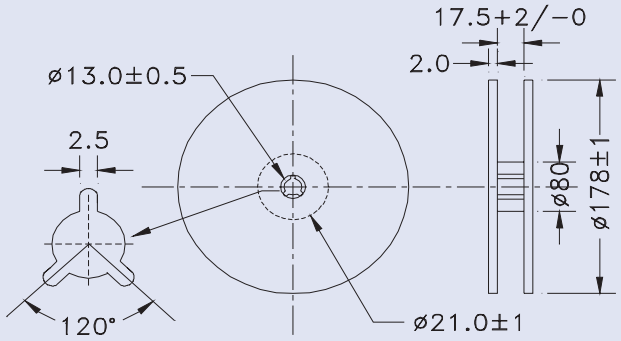

Dimensions: mm

30332 Esperanza, Rancho Santa Margarita, California 92688
tel 949-546-8000 | fax 949-546-8001 | www.abracon.com