## CONNECTOR DESIGNATOR

**D**

**DIRECT COUPLING**

**620 D S 054 M 16**

- Product Series
- Connector Designator
- Angle and Profile
  S = Straight
- Basic Part No.
- Finish (Table II)
- Shell Size (Table III)

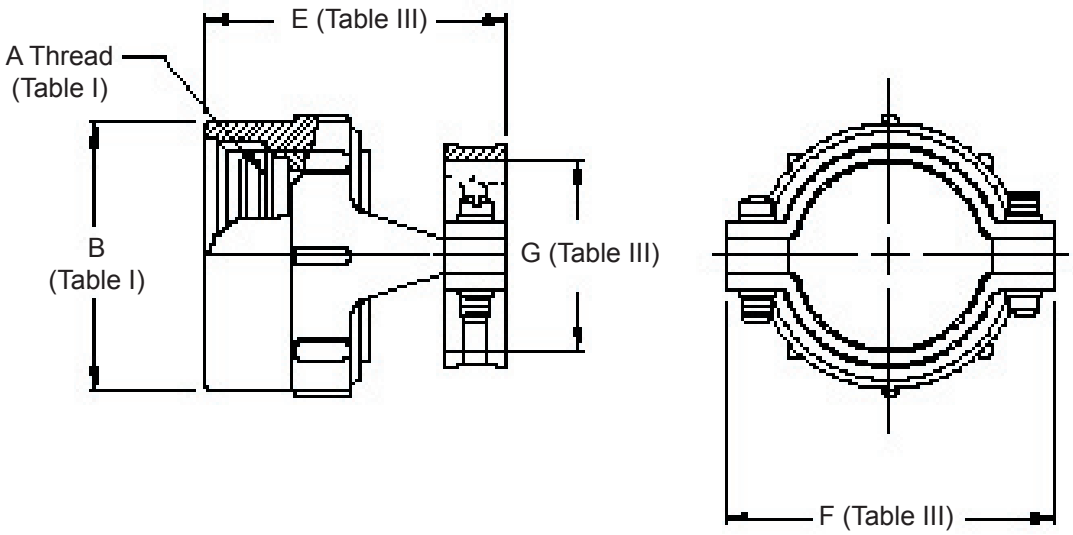


**See inside back cover fold-out or pages 13 and 14 for Tables I and II.**

**TABLE III: CABLE ENTRY**

| Shell Size | E Max | | F Max | | G Dia Max Closed | |
|---|---|---|---|---|---|---|
| 08 | 1.120 | (28.4) | .833 | (21.2) | .187 | (4.7) |
| 10 | 1.120 | (28.4) | .855 | (21.7) | .187 | (4.7) |
| 12 | 1.120 | (28.4) | 1.016 | (25.8) | .281 | (7.1) |
| 14 | 1.370 | (34.8) | 1.141 | (29.0) | .325 | (8.3) |
| 16 | 1.370 | (34.8) | 1.203 | (30.6) | .356 | (9.0) |
| 18 | 1.370 | (34.8) | 1.469 | (37.3) | .456 | (11.6) |
| 20 | 1.370 | (34.8) | 1.469 | (37.3) | .519 | (13.2) |
| 22 | 1.370 | (34.8) | 1.641 | (41.7) | .519 | (13.2) |
| 24 | 1.370 | (34.8) | 1.750 | (44.5) | .657 | (16.7) |

1. Cable Entry is defined as the accommodation entry for the wire bundle or cable. Dimensions are not intended for inspection criteria.
2. Metric dimensions (mm) are indicated in parentheses.

© 2005 Glenair, Inc.