P/N: 583-300024-B DATA SHEET

Feature

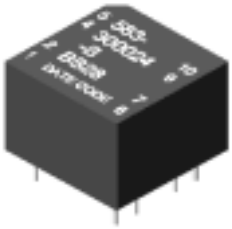

- Operating temperature range: 0℃ to +75℃
- Storage temperature range: -25℃ to +125℃.

Electrical Specifications @ 25°C							
Part Number	Turns Ratio (±5%)	OCL (mH Min)	L.L (uH Max)	$C_{W/W}$ (Max pF)	PRI DCR (±20% Ω)	PRI Pins	HI-POT (Vrms)
	(1-2):(4-5):(6-7):(9-10)						
583-300024-B	2:2:1:1	23	5	130	2.5	(1-2)&(4-5)	1000

Schematic

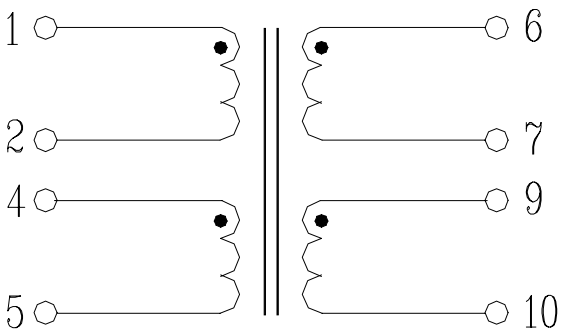

Mechanical

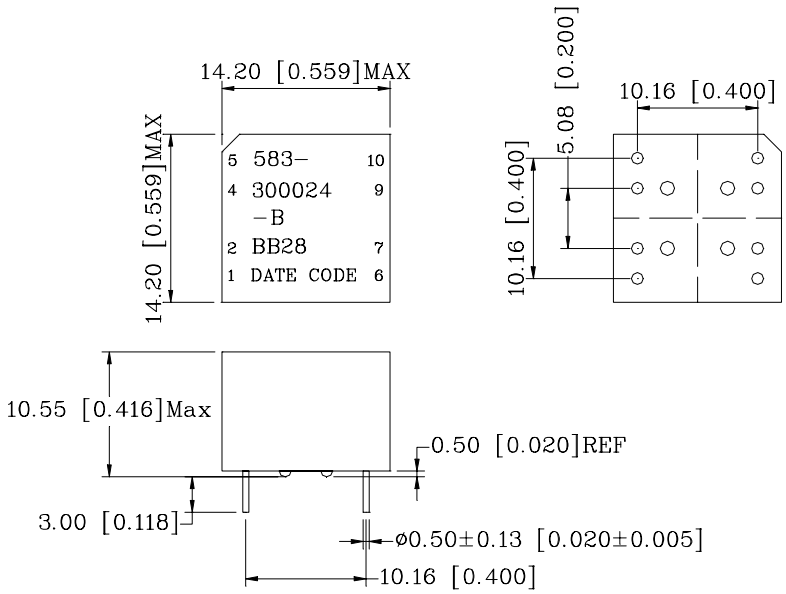

Units: mm[Inches] Tolerances: xx.x0±0.25[0.010]
0.xx±0.05[0.002]