SPECIFICATIONS

PARAMETERS	VALUES	UNITS
RATED INPUT POWER	0.1	W
MAX INPUT POWER	0.2	W
IMPEDANCE	8 ± 15%	OHM
OUTPUT SPL @ 1W/1M (AT 1.0, 1.2, 1.5, 2.0 kHz)	91 ± 5	dBA
DISTORTION (MAX.)	5%	-
RESONANT FREQUENCY	500 ± 20%	Hz
FREQUENCY RANGE	500 ~ 4500	Hz
HOUSING MATERIAL	METAL	-
CONE MATERIAL	TREATED PAPER	-
MAGNET MATERIAL	Nd-Fe-B	-
OPERATING TEMPERATURE	-20 ~ +60	°C
WEIGHT	15	grams

THIS DOCUMENT CONTAINS DATA PROPRIETARY TO PROJECTS UNLIMITED, INC. ANY USE OR REPRODUCTION, IN ANY FORM, WITHOUT PRIOR WRITTEN PERMISSION OF PROJECTS UNLIMITED, INC. IS PROHIBITED.
©2003, Projects Unlimited Inc.

REVISION HISTORY

LTR	DESCRIPTION	DATE	APPROVED
-	RELEASED FROM ENGINEERING	5/08/2006	
A	REVISED TO INVENTOR 3-D DRAWING TEMPLATE	9/25/2007	B.R.

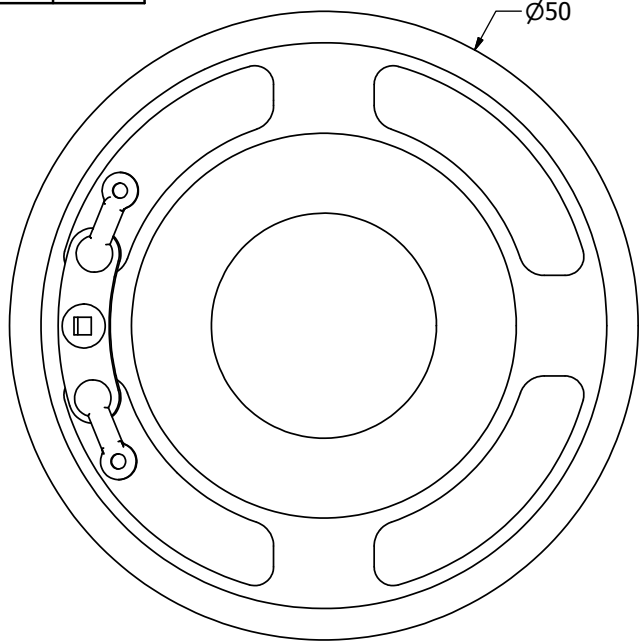

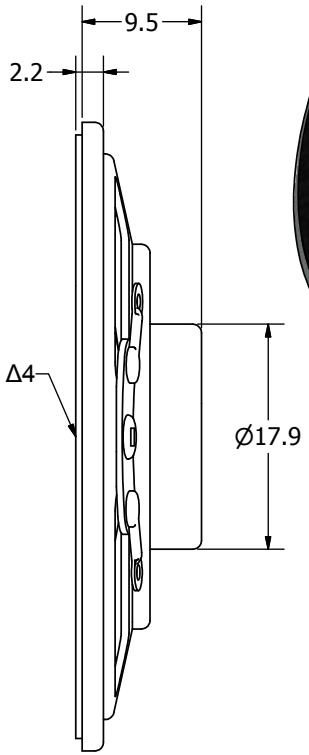

NOTES:

1. ALL DIMENSIONS ARE IN MILLIMETERS.
2. SPECIFICATIONS SUBJECT TO CHANGE OR WITHDRAWL WITHOUT NOTICE.
3. THIS PART IS RoHS 2002/95/EC COMPLIANT.

Δ4. CONE HAS BEEN TREATED FOR WATER RESISTANCE.

UNLESS OTHERWISE SPECIFIED:
DIMENSIONS ARE IN MILLIMETERS,
TOLERANCES ARE ±0.5 AND ANGLES ARE ±3°.

SIZE A3

AS05008PR-WR-R.idw

Designed by	Date	Checked by	Date	Approved by	Date	Drawn Date
J.D.	5/8/2006	E.P.	5/9/2006	B.R.	5/9/2006	9/25/2007

pui audio
A Division of Projects Unlimited

AS05008PR-WR-R

Speaker

Edition -

Sheet 1 / 1