W91410 SERIES

Winbond Electronics Corp.

TONE/PULSE DIALER WITH SAVE FUNCTION

GENERAL DESCRIPTION

The W91410 series are monolithic ICs that provide the necessary signals for either pulse or tone dialing. The W91410 series feature a redial and save memory.

FEATURES

- DTMF/Pulse switchable dialer
- Two by 32 digits for redial and save memory
- Pulse-to-tone (P→T) keypad for long distance call operation
- Break/Make ratio is selectable by pin option
- Uses 4 × 4 keyboard
- Easy operation with redial, flash, pause, and P→T keypads
- Flash, pause, P→T (Pulse-to-tone) can be stored as a digit in memory
- Minimum tone output duration: 100 mS
- Minimum intertone pause: 100 mS
- On-chip power-on reset
- Uses 3.579545 MHz crystal or ceramic resonator
- Packaged in 18-pin plastic DIP
- The different dialers in the W91410 series are shown in the following table:

TYPE NO.	PULSE (ppS)	FLASH (mS)	FLASH PAUSE (mS)	PAUSE (S)
W91412/A	10/20	600/300	600/300	2.0
W91414/A	10/20	73/100	140/100	3.6
W91416	10/20	600	600	3.6

PIN CONFIGURATION

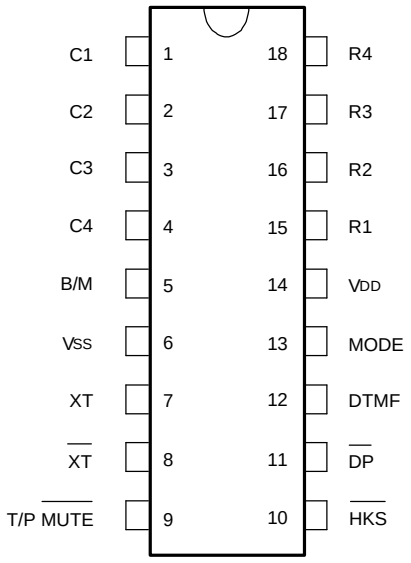

PIN DESCRIPTION

SYMBOL	PIN	I/O	FUNCTION
Column-Row Inputs	1–4 & 15–18	I	The keyboard input may be from either the standard 4 × 4 keyboard or an inexpensive single contact (form A) keyboard. Electronic input from a µC can also be used. A valid key entry is defined as a single row being connected to a single column.
XT, $\overline{XT}$	7, 8	I, O	A built-in inverter provides oscillation with an inexpensive 3.579545 MHz crystal or ceramic resonator.
T/P $\overline{MUTE}$	9	O	The T/P $\overline{MUTE}$ is a conventional CMOS N-channel open drain output. The output transistor is switched on during pulse and tone mode dialing sequence and flash break. Otherwise, it is switched off.
MODE	13	I	Pulling mode pin to VSS places the dialer in tone mode. Pulling mode pin to VDD places the dialer in pulse mode (10 ppS). Leaving mode pin floating places the dialer in pulse mode (20 ppS).
$\overline{HKS}$	10	I	Hook switch input. $\overline{HKS}$ = 1: On-hook state. Chip in sleeping mode, no operation. $\overline{HKS}$ = 0: Off-hook state. Chip enabled for normal operation. The $\overline{HKS}$ pin is pulled to VDD by an internal resistor.

Pin Description, continued

SYMBOL	PIN	I/O	FUNCTION
$\overline{DP}$	11	O	N-channel open drain dialing pulse output (Figure 1). Flash key will cause $\overline{DP}$ to go active in both pulse and tone mode.
DTMF	12	O	In pulse mode, remains in low state at all times. In tone mode, outputs a dual or single tone. Detailed timing diagram for tone mode is shown in Figure 2(a, b).
VDD, VSS	14, 6	I	Power input pins.
B/M	5	I	The break make ratio is 60:40 if B/M = 1 and is 66.6:33.3 if B/M = 0. This pin has no function in DTMF mode.

OUTPUT FREQUENCY			
	Specified	Actual	Error %
R1	697	699	+0.28
R2	770	766	-0.52
R3	852	848	-0.47
R4	941	948	+0.74
C1	1209	1216	+0.57
C2	1336	1332	-0.30
C3	1477	1472	-0.34

BLOCK DIAGRAM

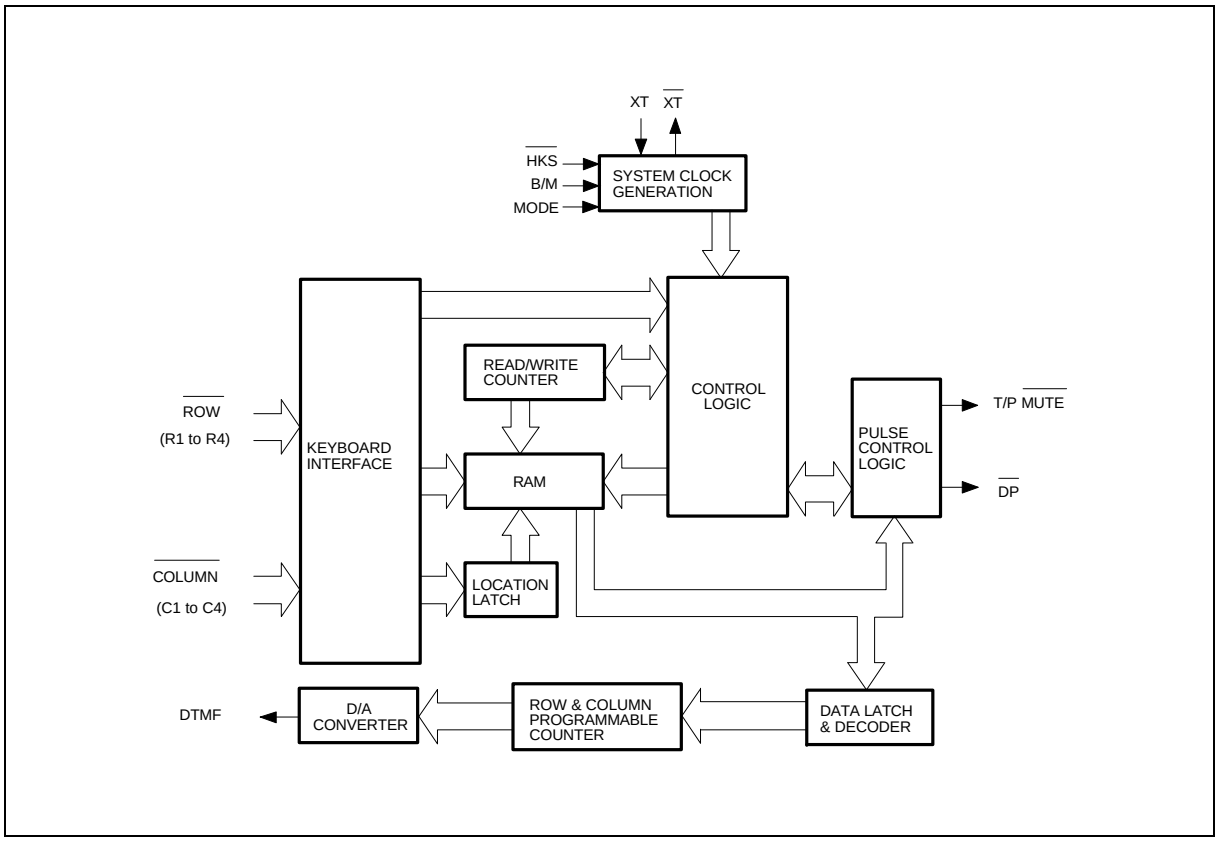

FUNCTIONAL DESCRIPTION

Keyboard Operation

C1	C2	C3	C4	
1	2	3	SAVE	R1
4	5	6	F	R2
7	8	9	P→T	R3
*	0	#	R/P	R4

- F: Flash key
- R/P: Redial and pause function key
- P→T: Pulse mode to tone mode
- SAVE: Save memory key

Normal Dialing

[OFF HOOK] , [D1] , [D2] , …, [Dn]

1. D1, D2, ..., Dn will be dialed out.
2. Dialing length is unlimited, but redial is inhibited if length oversteps 32 digits.

Redialing

[OFF HOOK] , [D1] , [D2] , …, [Dn] BUSY, COME [ON HOOK] , [OFF HOOK] , [R/P]

The [R/P] key can execute the redial function only as the first key-in after off-hook; otherwise, it will execute the pause function.

Access Pause

[OFF HOOK] , [D1] , [D2] , [R/P] , [D3] , …, [Dn]

1. The pause function can be stored in memory.
2. The pause function is executed in normal dialing or memory dialing.
3. The pause function timing diagram is shown in Figure 3.

Pulse-to-tone (P→T)

[OFF HOOK] , [D1] , [D2] , …, [Dn] , [P→T] , [D1'] , [D2'] , …, [Dn']

1. If the mode switch is set to pulse mode, then the output signal will be:
   D1, D2, ..., Dn, Pause, D1', D2', ..., Dn'
   (Pulse) (Tone)
2. If the mode switch is set to tone mode, then the output signal will be:
   D1, D2, ..., Dn, [P→T] D1, D2, ..., Dn,
   (Tone) (Pause) (Tone)
3. The dialer remains in tone mode when the digits have been dialed out and can be reset to pulse mode only by going on-hook.
4. The P→T function timing diagram is shown in Figure 4.

Flash

OFF HOOK , F

1. Flash key can be stored as a digit in memory.
2. The system will return to the initial state after the break time is finished.
3. The flash function timing diagram is shown in Figure 5.

OFF HOOK , D1 , D2 , …, Dn , SAVE

1. If the dialing of D1 to Dn is finished and the SAVE key is pressed, D1 to Dn will be copied to the SAVE memory.

ON HOOK , OFF HOOK , SAVE

2. D1 to Dn will be dialed out after the SAVE key is pressed.

ABSOLUTE MAXIMUM RATINGS

PARAMETER	SYMBOL	RATING	UNIT
DC Supply Voltage	V_{DD}–V_{SS}	-0.3 to +7.0	V
Input/Output Voltage	V_{IL}	V_{SS} -0.3	V
	V_{IH}	V_{DD} +0.3	V
	V_{OL}	V_{SS} -0.3	V
	V_{OH}	V_{DD} +0.3	V
Power Dissipation	P_D	120	mW
Operating Temperature	T_{OPR}	-20 to +70	°C
Storage Temperature	T_{STG}	-55 to +125	°C

Note: Exposure to conditions beyond those listed under Absolute Maximum Ratings may adversely affect the life and reliability of the device.

DC CHARACTERISTICS

(V_{DD}–V_{SS} = 2.5V, Fosc. = 3.58 MHz, T_A = 25° C, all outputs unloaded)

PARAMETER	SYMBOL	CONDITIONS	MIN.	TYP.	MAX.	UNIT
Operating Voltage	V_{DD}		2.0	-	5.5	V
Operating Current	I_{OP}	Tone	-	0.3	0.5	mA
		Pulse	-	0.15	0.3	mA
Standby Current	I_{SB}	$\overline{HKS}$ = 0, No load, & No key entry	-	-	15	µA
Memory Retention Current	I_{MR}	$\overline{HKS}$ = 1, V_{DD} = 1.0V	-	-	0.2	µA
DTMF Output Voltage	V_{TO}	Row group, R_L = 5 KΩ	130	150	170	mVrms
Pre-emphasis		Col/Row, V_{DD} = 2.0 to 5.5V	1	2	3	dB
DTMF Distortion	THD	R_L = 5 KΩ, V_{DD} = 2.0 to 5.5V	-	-30	-23	dB
DTMF Output DC Level	V_{TDC}	R_L = 5 KΩ, V_{DD} = 2.0 to 5.5V	1.0	-	3.0	V
DTMF Output Sink Current	I_{TL}	V_{TO} = 0.5V	0.2	-	-	mA
$\overline{DP}$ Output Sink Current	I_{PL}	V_{PO} = 0.5V	0.5	-	-	mA
T/P $\overline{MUTE}$ Output Sink Current	I_{ML}	V_{MO} = 0.5V	0.5	-	-	mA
$\overline{HKS}$ I/P Pull-high Resistor	R_{KH}		-	300	-	KΩ
Keypad Input Drive Current	I_{KD}	V_I = 0V	30	-	-	µA
Keypad Input Sink Current	I_{KS}	V_I = 2.5V	200	400	-	µA
Keypad Resistance			-	-	5.0	KΩ

AC CHARACTERISTICS

PARAMETER	SYMBOL	CONDITIONS	MIN.	TYP.	MAX.	UNIT
Keypad Active in Debounce	T_{KID}		-	20	-	mS
Key Release Debounce	T_{KRD}		-	20	-	mS
Pre-digit Pause[1]	$T_{PDP}1$	B/M = 1	-	40	-	mS
	10 ppS	B/M = 0	-	33.3	-	
Pre-digit Pause[2]	$T_{PDP}2$	B/M = 1	-	20	-	mS
	20 ppS	B/M = 0	-	16.7	-	
Interdigit Pause (Auto dialing)	T_{IDP}	10 ppS	-	800	-	mS
		20 ppS	-	500	-	
Make/Break Ratio	M/B	B/M = 1	-	40:60	-	%
		B/M = 0	-	33:67	-	
DTMF Output Duration	T_{TD}	Auto Dialing	-	100	-	mS
Intertone Pause	T_{ITP}	Auto Dialing	-	100	-	mS
Flash Break Time	T_{FB}	W91414	-	73	-	mS
		W91414A	-	100	-	
		W91412A	-	300	-	
		W91412/W91416	-	600	-	
Flash Pause Time	T_{FP}	W91414A	-	100	-	mS
		W91414	-	140	-	
		W91412A		300		
		W91412/W91416	-	600	-	
Pause Time	T_P	W91412	-	2.0	-	S
		W91414/A/W91416	-	3.6	-	

Notes:

1. Crystal parameters suggested for proper operation are Rs < 100 Ω, Lm = 96 mH, Cm = 0.02 pF, Cn = 5 pF, Cl = 18 pF, $F_{OSC.}$ = 3.579545 MHz ±0.02%.

2. Crystal oscillator accuracy directly affects these times.

TIMING WAVEFORMS

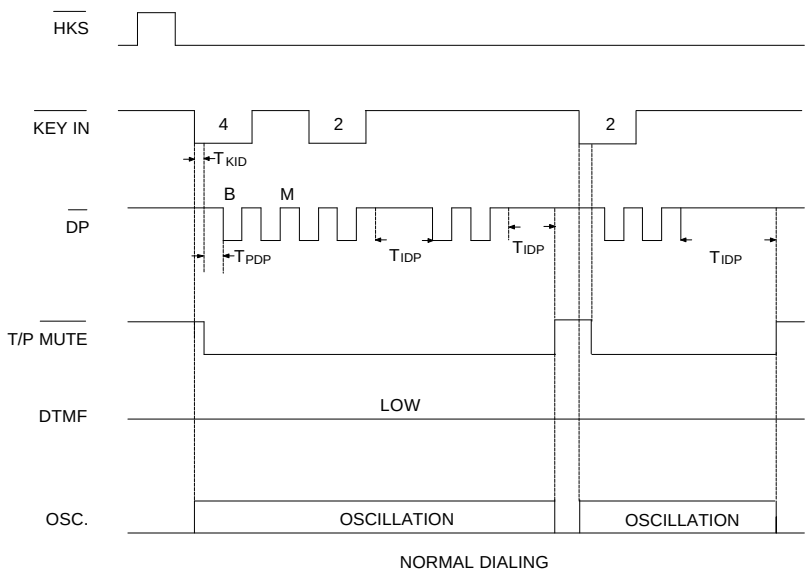

Figure 1(a). Pulse Mode Timing Diagram

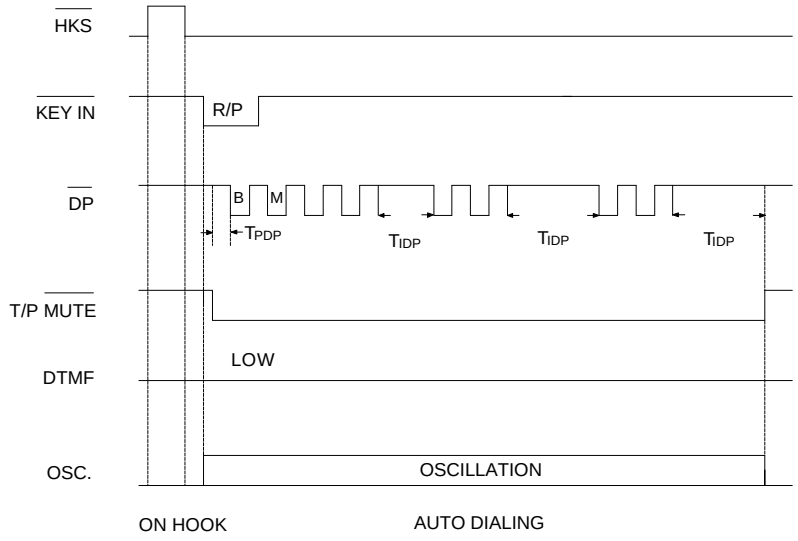

Figure 1(b). Pulse Mode Timing Diagram

Timing Waveforms, continued

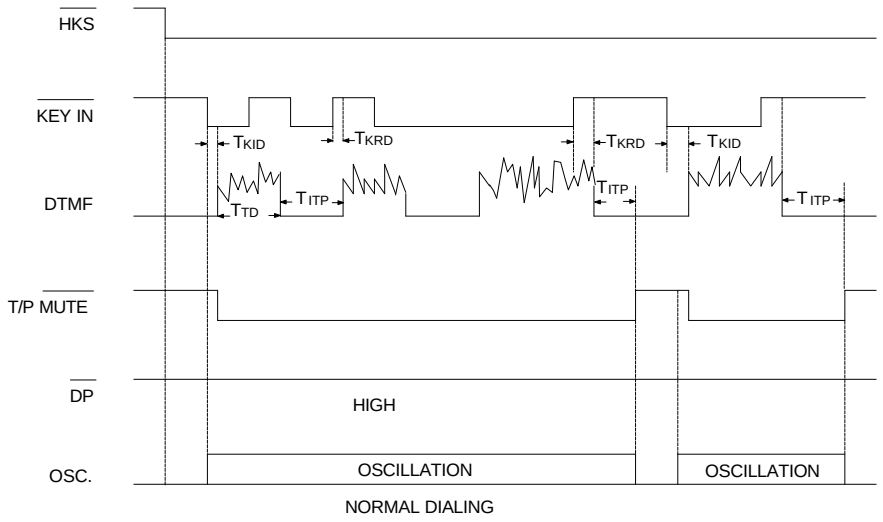

Figure 2(a). Tone Mode Timing Diagram

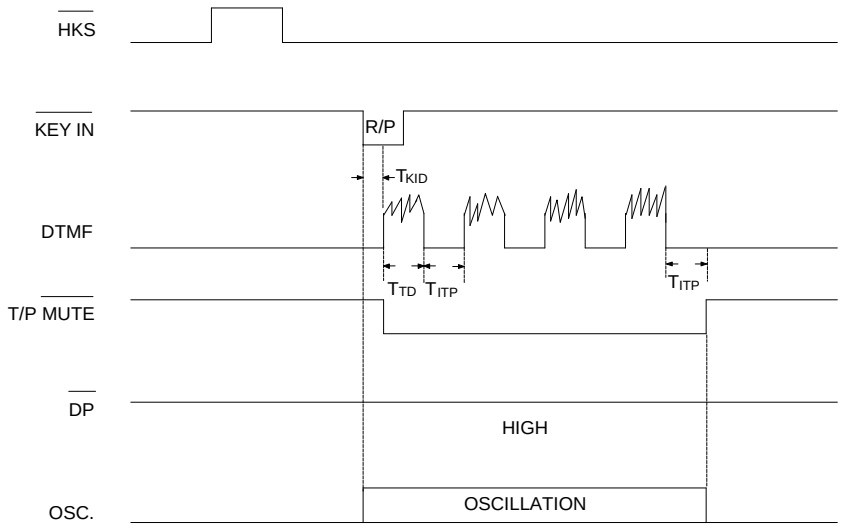

Figure 2(b). Tone Mode Auto Dialing Timing Diagram

Timing Waveforms, continued

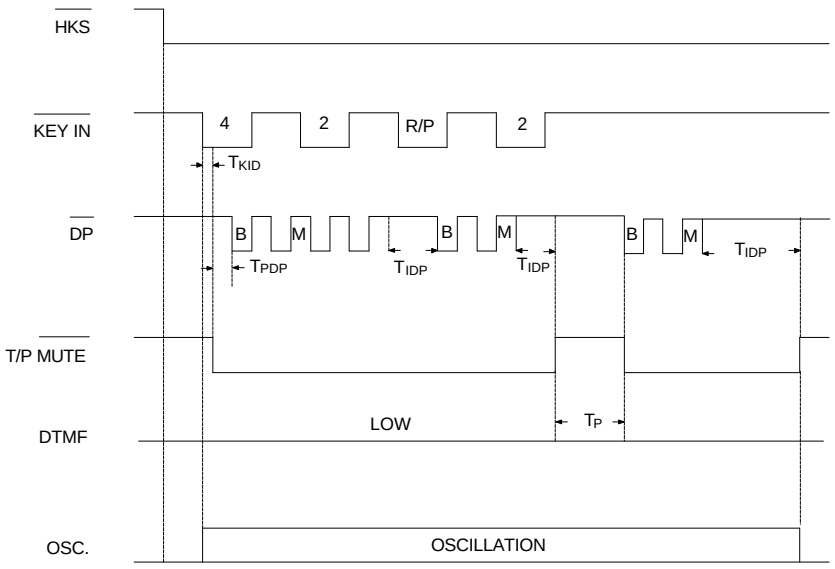

Figure 3. Pause Function Timing Dragram

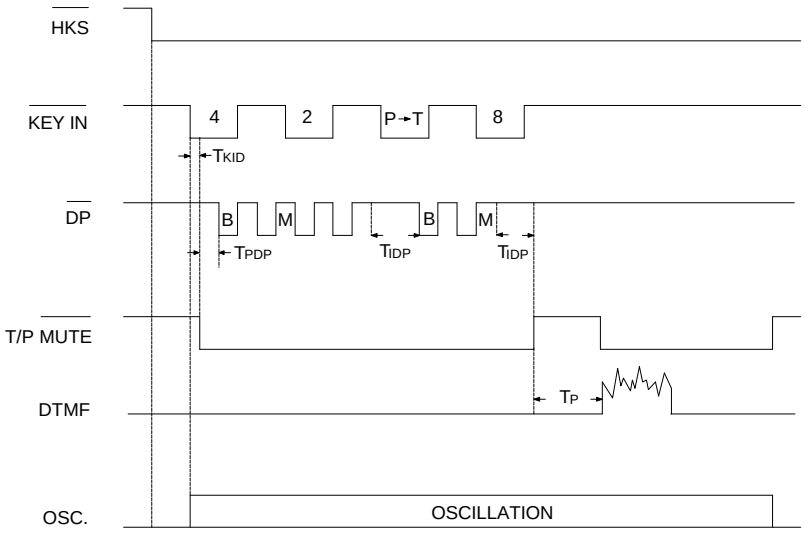

Figure 4. Pulse-to-Tone Function Timing Dragram

Winbond Electronics Corp.

Headquarters
No. 4, Creation Rd. III,
Science-Based Industrial Park,
Hsinchu, Taiwan
TEL: 886-3-5770066
FAX: 886-3-5792697
http://www.winbond.com.tw/
Voice & Fax-on-demand: 886-2-7197006

Taipei Office
11F, No. 115, Sec. 3, Min-Sheng East Rd.,
Taipei, Taiwan
TEL: 886-2-7190505
FAX: 886-2-7197502

Winbond Electronics (H.K.) Ltd.
Rm. 803, World Trade Square, Tower II,
123 Hoi Bun Rd., Kwun Tong,
Kowloon, Hong Kong
TEL: 852-27516023
FAX: 852-27552064

Winbond Electronics North America Corp.
Winbond Memory Lab.
Winbond Microelectronics Corp.
Winbond Systems Lab.
2730 Orchard Parkway, San Jose,
CA 95134, U.S.A.
TEL: 1-408-9436666
FAX: 1-408-9436668

Note: All data and specifications are subject to change without notice.