Low-Power Precision Voltage Detector

FEATURES

- **Ultra Low Current Consumption 2.4 µA**
- **Accurate Voltage Detection Threshold**
- **Fine Voltage Detection Threshold Resolution**
- **Open Drain Output (Active Low)**
- **Industrial temperature range -40°C to +85°C**
- **5-pin TSOT-23 RoHS compliant package**

APPLICATIONS

- **Battery-Powered Systems**
- **Power Supply Monitoring**
- **Handheld and Portable Equipment**
- **Processor Supervisor Reset**

DESCRIPTION

The CAT808 is a high-precision voltage detector designed for monitoring single cell and multi-cell batteries. Voltage detection thresholds between 2.0 V and 3.5 V are provided with 0.1 V resolution and ±3.0% accuracy.

The CAT808 open-drain output is active low until the V_{DD} voltage exceeds the detection threshold. A low hysteresis is built into the device to minimize output "chatter", while V_{DD} passes through the detection threshold, and the output transitions high.

After the CAT808 asserts the output high condition, it continues to monitor V_{DD} until it drops below the detection threshold, when the output goes low until V_{DD} once again exceeds the detection threshold.

For Ordering Information details, see page 6.

PIN CONFIGURATION

Thin SOT-23
5-Lead

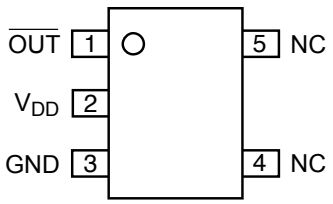

TYPICAL APPLICATION

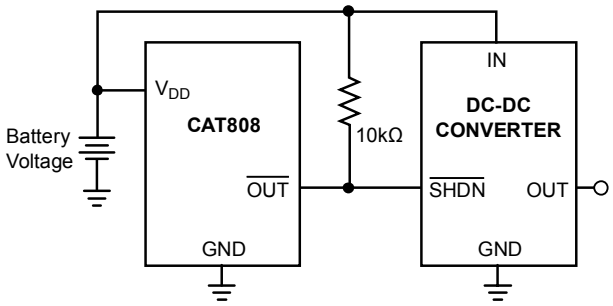

Note: The value of the pull-up resistor is not critical

ABSOLUTE MAXIMUM RATINGS [1]

Parameters	Ratings	Units
Temperature under Bias	-55 to +125	ºC
Storage Temperature	-65 to +150	ºC
Voltage on any Pin with Respect to GND[2][3]	-2.0 to V_{DD} + 2.0	V
V_{DD} with Respect to GND	-2.0 to 7.0	V
Lead Soldering temperature (10 seconds)	+300	ºC
Power Dissipation	250	mW

RECOMMENDED OPERATING CONDITIONS

Parameters	Ratings	Units
V_{DD}	+1.2 to +6.0	V
Operating Temperature Range	-40 to +85	ºC

DC ELECTRICAL CHARACTERISTICS

T_A = -40ºC to +85ºC, V_{DD} = 1.2V to 6.0V

Symbol	Parameter	Conditions		Min	Typ.	Max	Units
V_{DET}	Detection Voltage	CAT808Nxxx-25		2.43	2.5	2.57	V
		CAT808Nxxx-27		2.62	2.7	2.78	
		CAT808Nxxx-32		3.12	3.2	3.28	
		CAT808Nxxx-35		3.42	3.5	3.58	
I_{DD}	Current Consumption	V_{DD} = 4.0 V		-	2.4	5	µA
		V_{DD} = 5.0 V		-	3.5	7	
		V_{DD} = 6.0 V		-	5	10	
I_{OUT}	Output Sink Current	V_{DS} = 0.5 V	V_{DD}=1.2 V	0.6	1.4	-	mA
			V_{DD}=2.4 V	2.9	5	-	
I_{LEAK}	Output Leakage Current	V_{DS} = 5.0 V, V_{DD} = 5.0 V		-	-	1	µA
$T_{PHL/LH}$	Response Time	–		-	-	60	µs
$\frac{\Delta V_{DET}}{\Delta T_A \bullet V_{DET}(typ)}$	Detection Voltage Temperature Coefficient[4]			-	±10	±100	ppm/ºC

Notes:

(1) Stresses above those listed under "Absolute Maximum Ratings" may cause permanent damage to the device. These are stress ratings only and functional operation of the devices at these or any other conditions outside of those listed in the operational sections of this specification is not implied. Exposure to any absolute maximum rating for extended periods may affect device performance and reliability.

(2) The Minimum DC input voltage is -0.5 V. During transitions, inputs may undershoot to -2.0 V for periods of less than 20 ns. Maximum DC voltage on output pins is V_{CC} +0.5 V, which may overshoot to V_{CC} +2.0 V for periods of less than 20 ns.

(3) Latch-up protection is provided for stresses up to 100 mA on all pins from -1 V to V_{CC} +1 V.

(4) The temperature change ratio in the detection voltage [ppm/°C] is calculated by using the following equation:

$$\frac{\Delta V_{DET}}{\Delta T_A \bullet V_{DET}(typ)} \times 1{,}000{,}000[ppm/^{o}C]$$

OPERATION – VOLTAGE DETECTOR

The CAT808 has an active low output that asserts (pulls low) when the supply voltage drops below the detection threshold voltage (V_{DET}). The open-drain output requires an external pull-up resistor between the output pin and the supply voltage (as shown in the typical application diagram). On power-up, $\overline{OUT}$ is held active low until the supply voltage (V_{DD}) rises above V_{DET}. While V_{DD} is above V_{DET}, $\overline{OUT}$ stays high until V_{DD} drops below V_{DET}, then $\overline{OUT}$ once again goes low.

BLOCK DIAGRAM

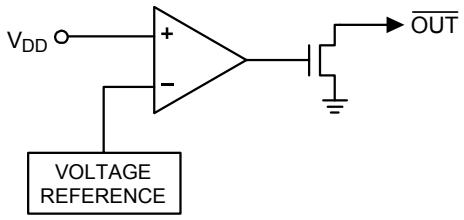

TIMING DIAGRAM

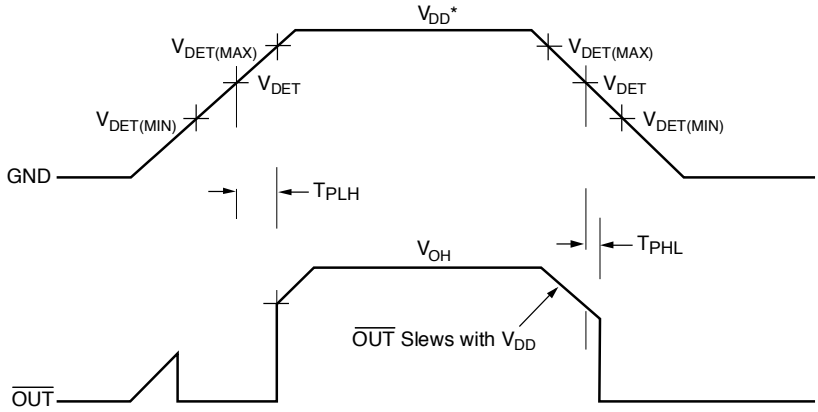

* Voltage of V_{DD} below 1 volt will not be able to maintain low output.

PIN FUNCTIONS

Pin	Function
V_{DD}	Voltage Input and Power Supply
GND	Ground Pin
$\overline{OUT}$	Active Low Open Drain output
NC	No Connect, the pin is electrically open

TYPICAL ELECTRICAL OPERATING CHARACTERISTICS

Typical values at T_A = 25°C.

V_{DD} Supply Current vs. V_{DD} Supply Voltage

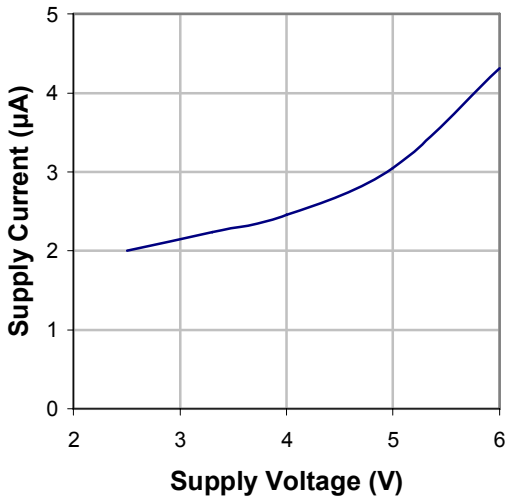

V_{DET} Detection Voltage vs. Temperature

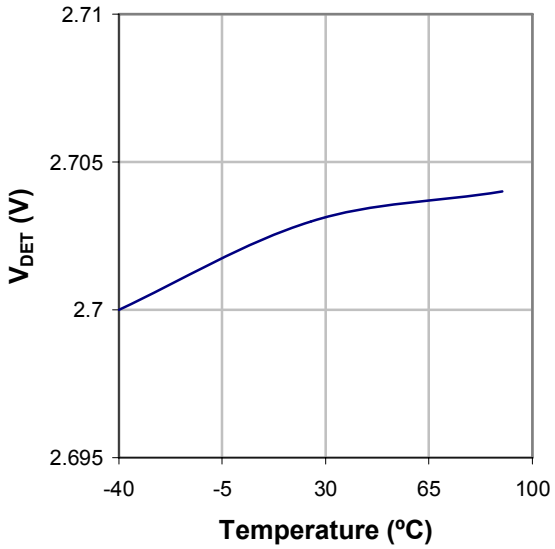

Response time vs. Load Capacitance

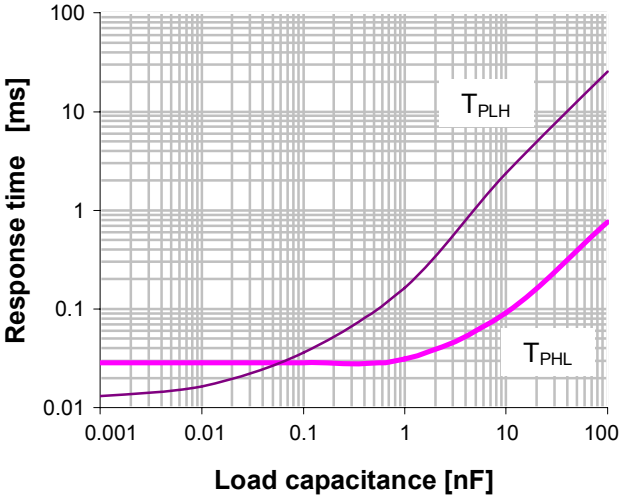

I_{OUT} Transistor Output Current vs. V_{DD} Supply Voltage

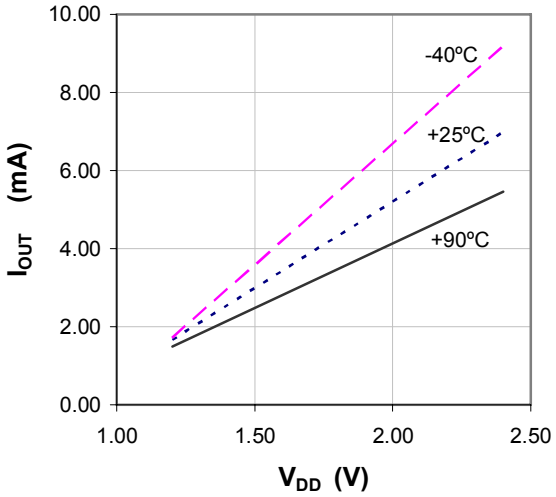

PACKAGE OUTLINE DRAWINGS

TSOT-23 5-Lead (TD) (1)(2)

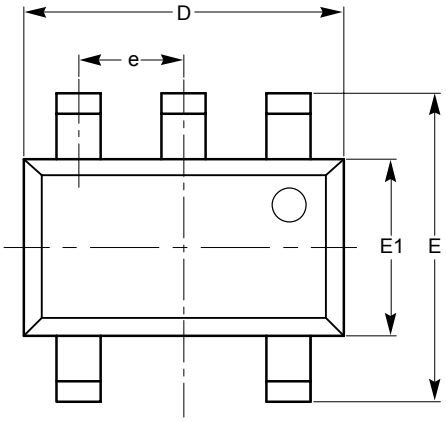

TOP VIEW

SYMBOL	MIN	NOM	MAX
A			1.00
A1	0.01	0.05	0.10
A2	0.80	0.87	0.90
b	0.30		0.45
c	0.12	0.15	0.20
D	2.90 BSC		
E	2.80 BSC		
E1	1.60 BSC		
e	0.95 TYP		
L	0.30	0.40	0.50
L1	0.60 REF		
L2	0.25 BSC		
θ	0º		8º

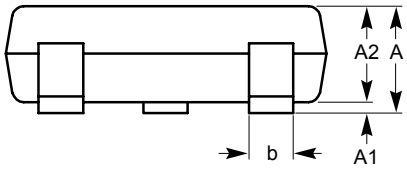

SIDE VIEW

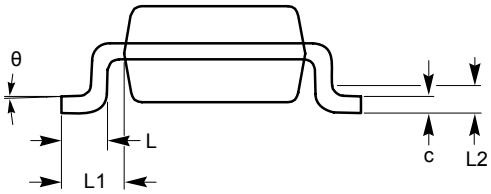

END VIEW

Notes:

(1) All dimensions are in millimeters. Angles in degrees.

(2) Complies with JEDEC specification MO-193.

EXAMPLE OF ORDERING INFORMATION

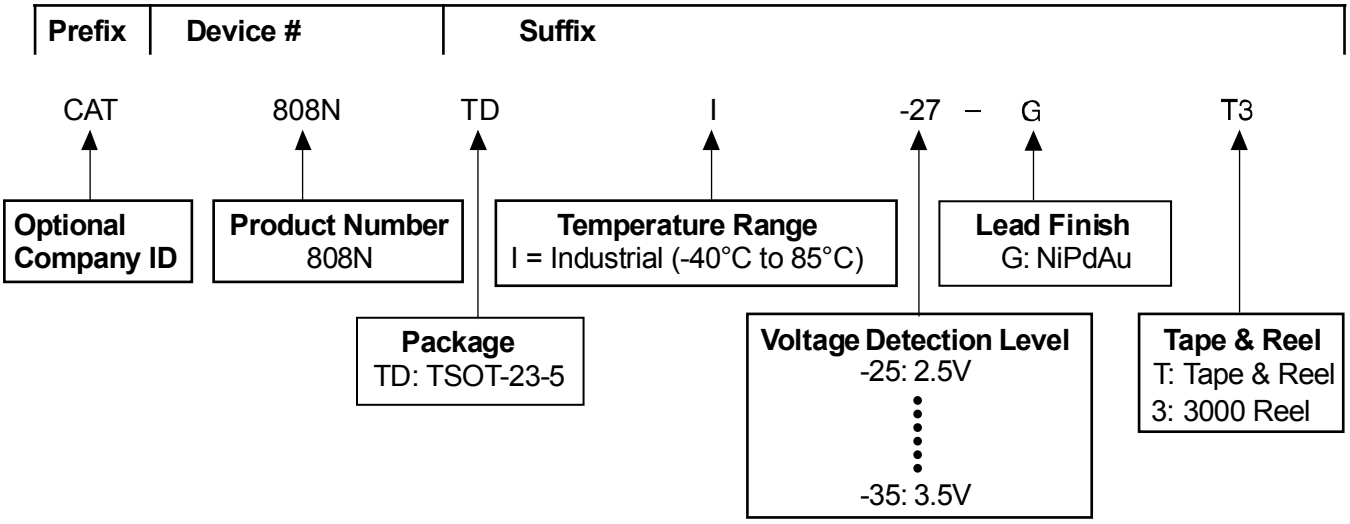

Notes:

(1) All packages are RoHS-compliant (Lead-free, Halogen-free).

(2) The standard finish is NiPdAu.

(3) The device used in the above example is a CAT808NTDI-27GT3 (TSOT-23-5, Industrial Temperature, 2.7 V Detection Level, NiPdAu, Tape & Reel, 3000 Reel).

(4) For additional detection voltage, package and temperature options, please contact your nearest ON Semiconductor Sales office.

ORDERING INFORMATION

Orderable Part Number	Package	Detection Voltage [V]	Top Marking
CAT808NTDI-25GT3	TSOT-23-5	2.50	MVym
CAT808NTDI-27GT3	TSOT-23-5	2.70	MVym
CAT808NTDI-32GT3	TSOT-23-5	3.20	MVym
CAT808NTDI-35GT3	TSOT-23-5	3.50	MVym

* Part number is not exactly the same as the “Example of Ordering Information” shown above. For part numbers marked with * there are two hyphens in the orderable part number.

Notes:

(1) ym – Year and Month Code.

REVISION HISTORY

Date	Rev.	Description
7-Nov-06	A	Initial Issue
10-May-07	B	Update Features Update Description Update DC Electrical Characteristics Update Example of Ordering Information Update Top Marking
5-Nov-08	C	Added MD- to document number Change logo and fine print to ON Semiconductor
17-Mar-09	D	Update Package Outline Drawing - SOT-89 3-Lead (TF)
13-Jul-09	E	Update Ordering Information table
17-May-10	F	Update DC Electrical Characteristics Remove SOT-89 Package Update Example of Ordering Information Update Ordering Information

PUBLICATION ORDERING INFORMATION
LITERATURE FULFILLMENT:

Literature Distribution Center for ON Semiconductor
P.O. Box 5163, Denver, Colorado 80217 USA
Phone: 303-675-2175 or 800-344-3860 Toll Free USA/Canada
Fax: 303-675-2176 or 800-344-3867 Toll Free USA/Canada
Email: orderlit@onsemi.com

N. American Technical Support: 800-282-9855 Toll Free USA/Canada
Europe, Middle East and Africa Technical Support:
Phone: 421 33 790 2910
Japan Customer Focus Center:
Phone: 81-3-5773-3850

ON Semiconductor Website: www.onsemi.com

Order Literature: http://www.onsemi.com/orderlit

For additional information, please contact your local Sales Representative