SAWTEK INCORPORATED

Data Sheet

140 MHz Bandpass Filter

24 MHz Bandwidth

Part Number 851933

Typical Performance

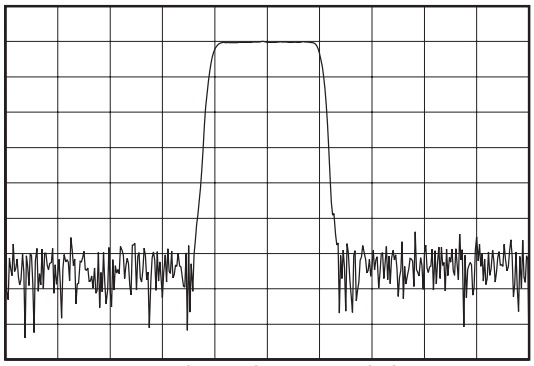

Horizontal: 12 MHz/Div
Vertical: 10 dB/Div

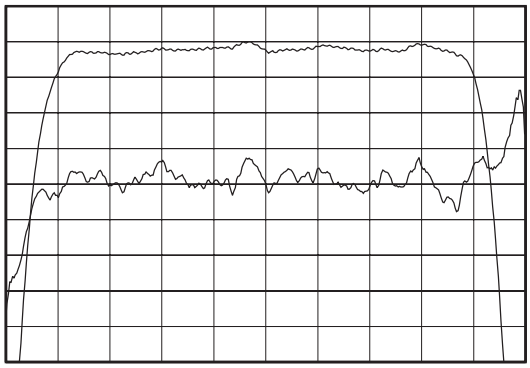

Horizontal: 2.8 MHz/Div
Vertical: 1 dB/Div
Vertical: 10 nsec/Div

Specifications

Parameter	Unit	Minimum	Typical	Maximum
Center Frequency	MHz	139.75	140	140.25
Insertion Loss at 140 MHz	dB	-	24.7	26.5
1 dB Bandwidth	MHz	22.5	22.76	-
3 dB Bandwidth	MHz	24	24.27	-
40 dB Bandwidth	MHz	-	29.88	30.3
Passband Variation	dB	-	0.3	0.6
Phase Linearity (1 dB BW)	deg p-p	-	3.3	6
Group Delay Variation (1 dB BW)	nsec	-	12	35
Absolute Delay	µsec	-	1.278	-
Ultimate Rejection	dB	50	60	-
Substrate Material	-	-	128 $LiNbO_3$	-
Ambient Temperature	°C	-	25	-

Package Outline

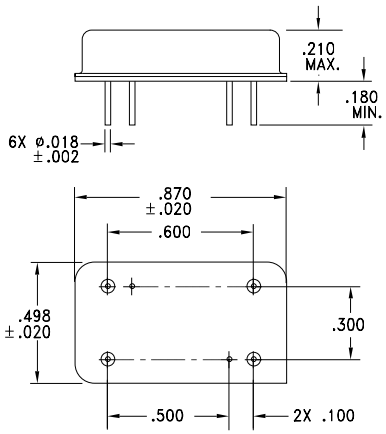

Matching Configuration

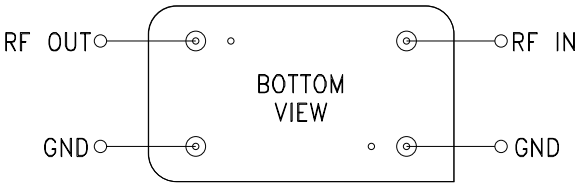

No Matching Required
Nominal Source/Load Impedance = 50Ω
Package Style I

11/24/99

Sawtek Inc. Telephone: (407) 886-8860 Fax: (407) 886-7061