| REV | DESCRIPTION | BY DATE | APPD |
|---|---|---|---|
| A | RELEASED DRAWING PER ER041905 | COL 08/08/11 | DCam |

NOTES: UNLESS OTHERWISE SPECIFIED

1. FOR GENERAL SERIES SPECIFICATIONS, SEE SDPRF-206.

2. MATERIAL SPECIFICATIONS:
   BAYONET SLEEVE, BODY: BRASS PER ASTM B16
   INSULATOR: TEFLON PER ASTM D1710
   CONTACT,SPRING WASHER,OUTER CONTACT: BERYLLIUM COPPER, ASTMB196
   GASKET: SILICONE RUBBER, A-A-59588

3. FINISH SPECIFICATIONS:
   BAYONET SLEEVE, BODY: .000100MIN NICKEL PER AMS-QQ-N-290
   OVER COPPER FLASH PER ASTM B734 (ROHS)
   CONTACT: .000030 MIN. GOLD PER ASTM B488, OVER .000080 MIN NICKEL PER AMS-QQ-N-290 (ROHS)
   SPRING WASHER: .000200 MIN SILVER PER QQ-S-365 OVER .000020 MIN COPPER PER ASTM B734 (ROHS)

   ALL OTHER METAL PARTS: .000050 MIN NICKEL PER AMS-QQ-N290 OVER
   .000050 MIN COPPER PER ASTM B734 (ROHS)

4. ELECTRICAL SPECIFICATIONS:
   IMPEDANCE: 75 OHMS
   FREQUENCY RANGE: DC TO 3 GHz
   RETURN LOSS: 25 dB MIN

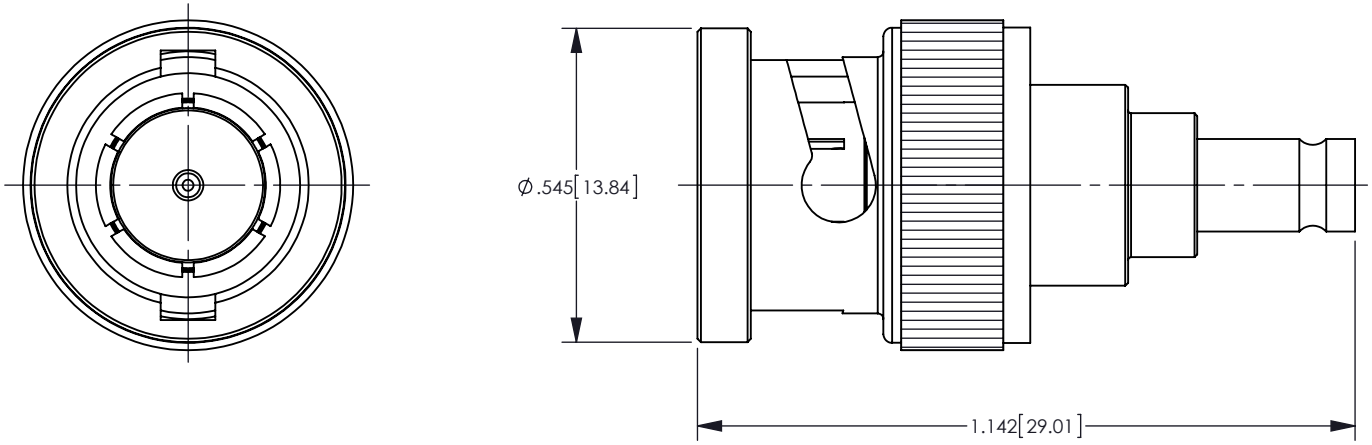


CATALOG P/N:206H-034-00001N

PER ASME Y14.5M-1994
UNLESS OTHERWISE SPECIFIED:
DIMENSIONS ARE IN INCHES [MM]
TOLERANCES:
DECIMAL: .XX [X.X] ± .01 [0.3]
.XXX [X.XX] ± .005 [0.13]
.XXXX [X.XXX] ± .XXXX
ANGLES: ± 2° SCALE: 3:1

KINGS by WINCHESTER ELECTRONICS
Winchester Electronics Corporation
62 Barnes Industrial Road North
Wallingford, Connecticut 06492

CUSTOMER SALES DRAWING

THIRD ANGLE

BNC MALE TO 1.0/2.3 FEMALE ADAPTOR(ROHS)

| DRAWN | DATE | APPROVED | DATE |
|---|---|---|---|
| COL | 08/08/11 | DCam | 08/15/11 |
| APPROVED | DATE | APPROVED | DATE |
| XXX | XX/XX/XX | XXX | XX/XX/XX |

| A | SD206H-034-00001N | SHT 1 | OF 1 | REV A |
|---|---|---|---|---|

DMF026 B