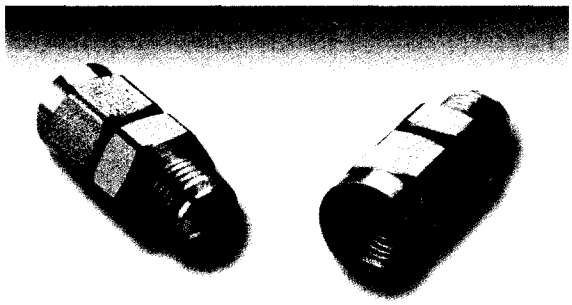

EMC Technology offers the popular temperature variable attenuator in a coaxial package. The coaxial Thermopad offers the same benefits as the standard temperature variable attenuator with the added benefit of a SMA male to SMA female interface.

General Specifications

Nominal Impedance ..... *50 Ohms Nominal*
Frequency Range ..... *DC to 6 GHz*
Attenuation Accuracy ..... *±0.5 dB*
TCA Tolerance ..... *±0.001 dB/dB/°C*
VSWR (Typical) ..... *1.35 @ 1 GHz*
Power Rating ..... *2.0 Watts*
Power Derating ..... *100% @ 125° C*
Derates to 0% @ 150° C
Operating Temperature ..... *-55° C to +150° C*

Material Specifications

Substrate ..... *Alumina*
Resistive Material ..... *Thick Film*
Termination Material .. *Thick Film, Nickel Barrier with Solder Plated Finish*
Body and Nut ..... *Stainless Steel*
Contact ..... *Beryllium Copper*
Dielectric ..... *Tetreflourethylene*
Interface ..... *SMA Male/SMA Female*

Finish
Body ..... *Passivated*
Coupling Nut ..... *Passivated*
Contact ..... *Gold*

Usable Frequency Range Reference Table

CTVA ..... *DC to 2 GHz*
TVA, W1, W3 ..... *DC to 6 GHz*
MTVA, G (N3, N4, N5) ..... *DC to 18 GHz*
MTVA, G (N6, N7) ..... *DC to 12.4 GHz*
MTVA, W3, WB1, W1 ..... *DC to 12.4 GHz*
HTVA ..... *DC to 20 GHz*
KTVA ..... *18 to 46 GHz*
Coaxial TVA ..... *DC to 6 GHz*

Ordering Information

42TVA	03	00	N	05
SERIES	**NOMINAL ATTENUATION**	**EMC CODE**	**TCA SLOPE**	**TCA (dB/dB/°C)**
42TVA	**01** = 1 dB		**N** = Negative	**03** = .003
	02 = 2 dB		**P** = Positive	**04** = .004
	03 = 3 dB			**05** = .005
	04 = 4 dB			**06** = .006
	05 = 5 dB			**07** = .007
	06 = 6 dB			**09** = .009
	07 = 7 dB			
	08 = 8 dB			
	09 = 9 dB			
	10 = 10 dB			

Note: All TVA values are available in Coaxial.
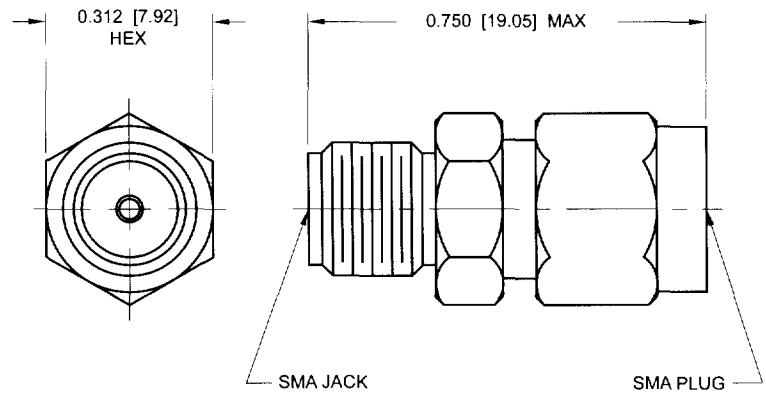
Product Dimensions