DATA CONTAINED IN THIS DOCUMENT IS PROPRIETARY TO TROMPETER ELECTRONICS INC. AND SHALL NOT BE DISCLOSED, COPIED OR USED FOR PROCUREMENT OR MANUFACTURE WITHOUT EXPRESS WRITTEN PERMISSION.

REVISIONS			2-0008		SH 1
REV	ECO	DESCRIPTION	DWN	APPROVED	DATE
AB	10675	ADDED -55; SEE ECO	DKC		

DASH NO	CABLES ACCOMMODATED	ASSEMBLE PER
-8	8227 BELDEN	TAI-140
-9	TWC-78-2/TWC-24-2	TAI-121
-10	RG-22/754E AT&T	TAI-140
-11	760 AT&T	
-12	16 PEVL AT&T/ VI/AL GENERAL	TAI-139
-25	T-43M GENERAL	TAI-121
-27	202-3927 MICROOOT	
-29	TWC-78-1/TWC-24-1A	
-46	9860 BELDEN	TAI-140
-47	M17/176-00002	TAI-121
-49	TWAC-78-1F2	
-54	89207 BELDEN	TAI-140
-55	89272 BELDEN	TAI-121

FIG 1 △4

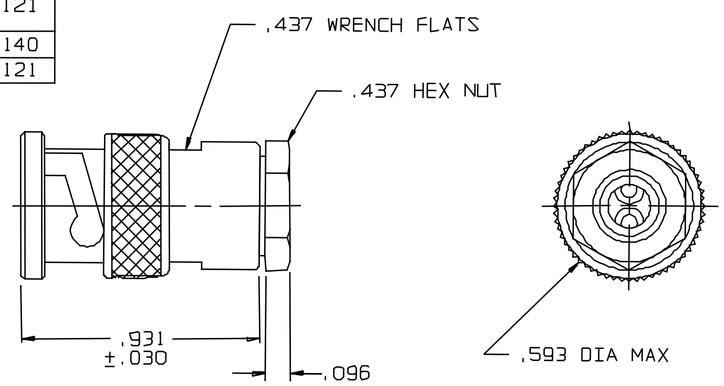

-9 SHOWN

-9,-25,-27,-29,-47 & -49

FIG 2

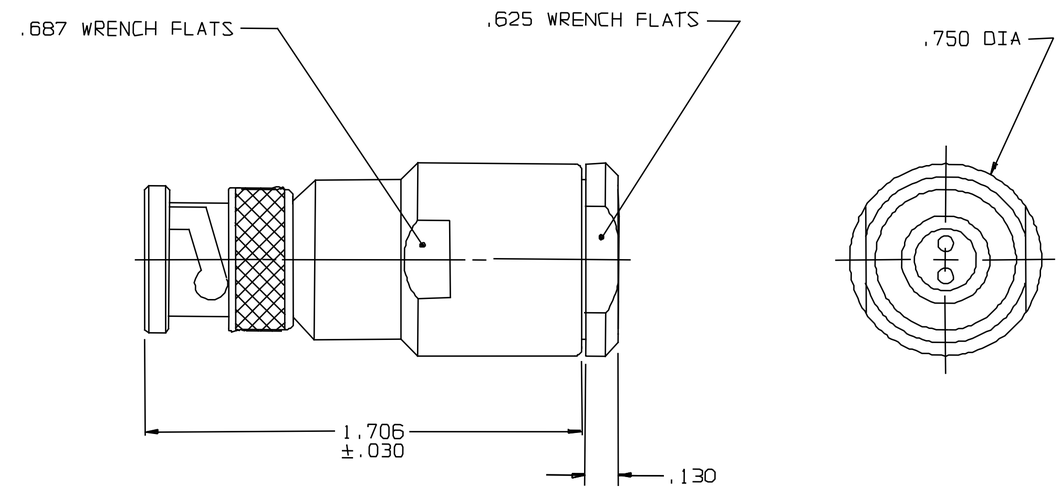

-8 SHOWN

-8,-10,-11,-12,-46 & -54

FIG 3 △4

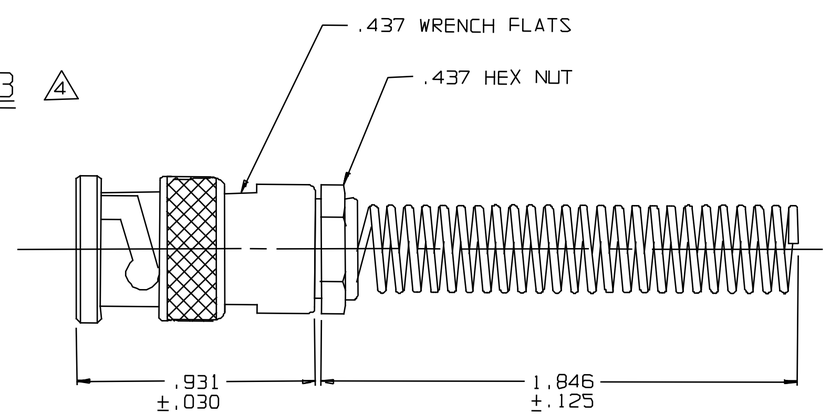

-9BR SHOWN

-9,-25,-27,-29,-47 & -49

INCH	MM
.005	0.13
.030	0.76
.096	2.44
.125	3.18
.130	3.30
.437	11.10
.593	15.06
.625	15.88
.687	17.45
.750	19.05
.931	23.65
1.706	43.33
1.846	46.89

6. EXAMPLE OF COMPLETE PART NO:

2-0008 - 25 BR △4

BASIC PART NO — DASH NO

5. EXAMPLE OF COMPLETE MODEL NO:

PL30 - 25 BR △4

BASIC MODEL NO — DASH NO

△4 IF BEND RELIEF SPRING REQD, (SEE FIG 3) ADD SUFFIX "BR" TO DASH NO (NOT AVAILABLE WITH CABLE GROUPS -8,-10,-11,-12,-46 & -54)

3. TWINAXIAL BNC TYPE, TWO PIN CABLE PLUG

2. FINISH: TFS-1A (NICKEL)

1. ALL DIM ARE IN INCHES

	DESCRIPTION			PART NUMBER		ITEM
	TOL UNLESS SPECIFIED .XX ± .XXX ±.005 .XXXX± ANGLES±		TROMPETER ELECTRONICS, INC.	PL30		
	DWN	DKC	4-25-94	MATERIAL ———	CODE IDENT 14949	DRAWING NO. 2-0008	REV AB
	CHK					
	ENGR					
NEXT ASSY	APPR			SCALE 2/1	DATE 2/16/66	SHEET 1 OF 2