REVISIONS				
REV. SYM.	E.C.O. NUMBER	DESCRIPTION	BY DATE	APP'D DATE
1		ORIGINAL RELEASE	JWJ 11/2/99	RRR 11/3/99

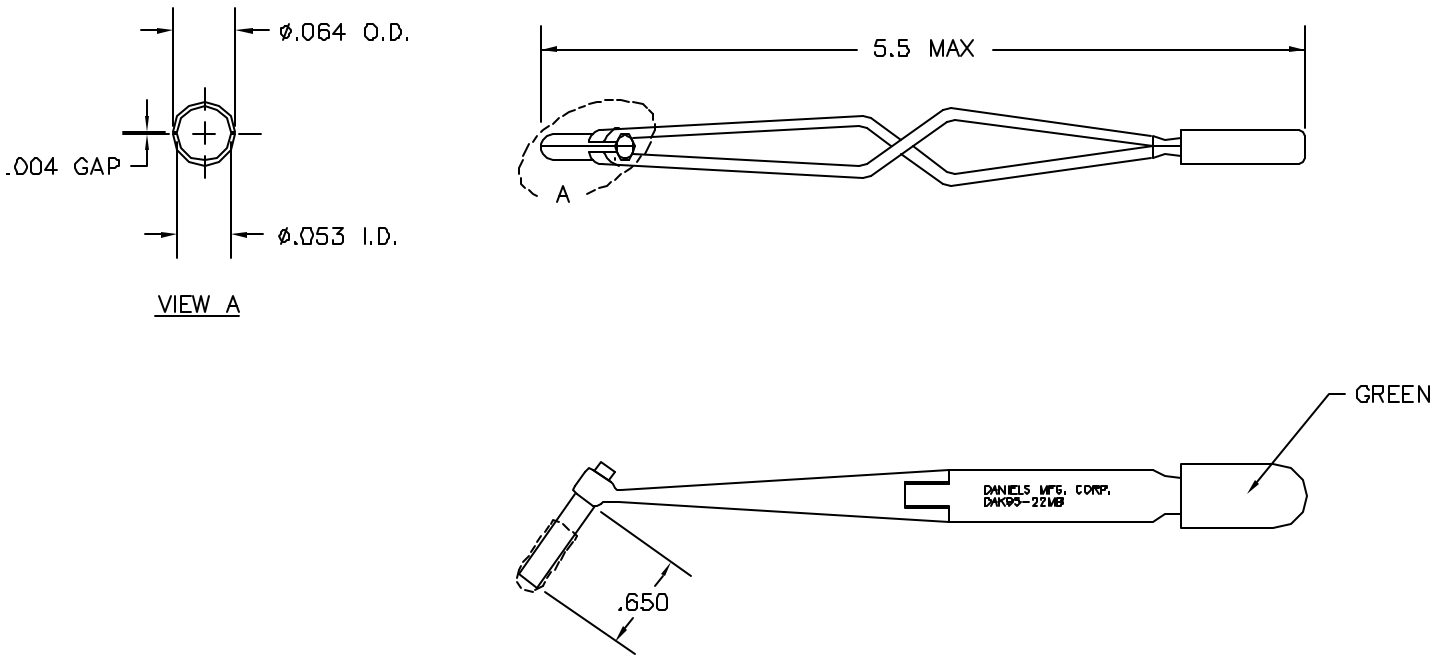

UNCONTROLLED DOCUMENT WILL NOT BE UPDATED

RESTRICTED & CONFIDENTIAL

CONFIDENTIAL PROPERTY OF DANIELS MANUFACTURING CORP. NOT TO BE DISCLOSED TO OTHERS, REPRODUCED OR USED FOR ANY OTHER PURPOSE, EXCEPT AS AUTHORIZED IN WRITING BY DANIELS MANUFACTURING. MUST BE RETURNED TO DANIELS MANUFACTURING CORP. ON COMPLETION OF ORDER OR OTHER PURPOSE FOR WHICH LENT.

DO NOT SCALE DRAWING

ITEM	PART NO.	QTY.	DESCRIPTION/REMARKS

DRN. J. JOYCE	DATE 11/3/99	DANIELS MANUFACTURING CORP. ORLANDO, FLORIDA CAGE 11851	
CHK'D. RRR	DATE 11/3/99		
APP'D.	DATE	TITLE INSTALLING TOOL ENVELOPE DRAWING	
APP'D.	DATE		

WHERE USED:

SIZE	SCALE	CAD P/N	SHEET	OF
B	NTS	DAK95-22MB-ENV	1	1

POSTING	P/N	REV.
	DAK95-22MB-ENV	1