APPROVED: _____

DATE: _____ TITLE: _____

Rev	AWO #	Description	Date	Appr
-		RELEASED	4/15/05	
A		ADDED PART NO. -2 & -4 TO CHART	2/20/07	
B		ADDED DIMENSIONS TO PCB LAYOUT	5/18/09	

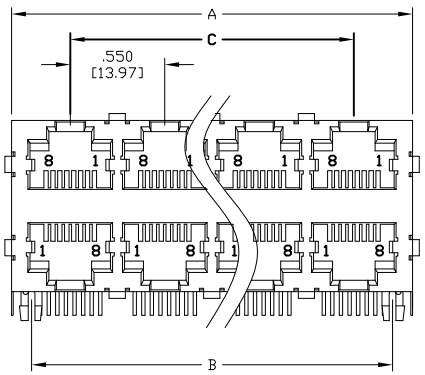

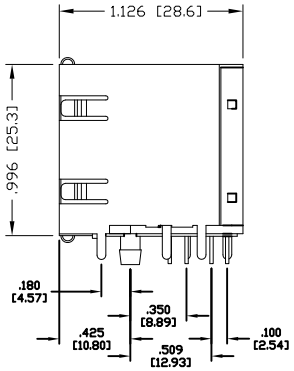

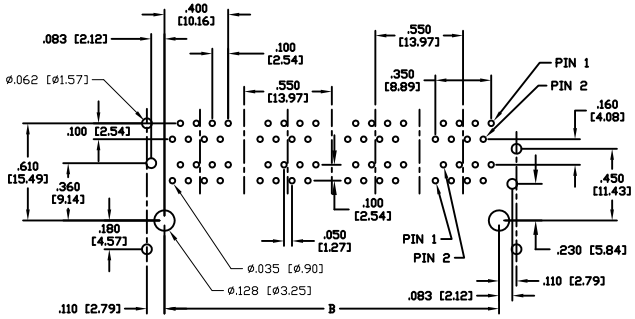

Recommended PCB Layout

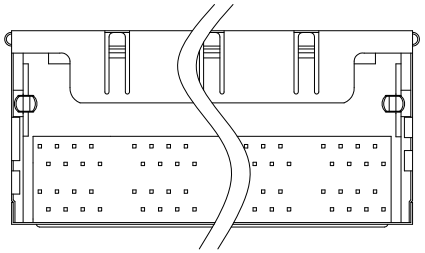

PART NUMBER	PORTS	DIMENSIONS		
		A	B	C
MTJG-2-88JX1-FSG-PG	2 X 1	.679 [17.27]	.450 [11.43]	
MTJG-4-88JX1-FSG-PG	2 X 2	1.227 [31.17]	1.000 [25.40]	.550 [13.97]
MTJG-6-88JX1-FSG-PG	2 X 3	1.780 [45.21]	1.549 [39.34]	1.100 [27.94]
MTJG-8-88JX1-FSG-PG	2 X 4	2.33 [59.18]	2.100 [53.34]	1.650 [41.91]
MTJG-12-88JX1-FSG-PG	2 X 6	3.43 [87.10]	3.200 [81.28]	2.750 [69.85]

SPECIFICATIONS:

Material:

Insulator: PBT, glass reinforced, rated UL 94V-0
Insulator color: Black
Shield: Phosphor Bronze, Tin plated
Contacts: Phosphor Bronze

Plating:

Gold over Nickel underplate on contact area, Tin over Copper underplate on tails (See chart)

Electrical:

Operating voltage: 150 VAC max
Current rating: 1.5 Amps max
Contact resistance: 20 mohms max
Insulation resistance: 500 Mohms min @ 500 VDC
Dielectric withstanding voltage: 1000 VAC for 1 minute

Temperature Rating:

Operating temperature: -40°C to +125°C
Approvals: cUL File #: E224049

Environmental:

Lead free, RoHS compliant.
Recommended soldering temp: 235°C for 5 sec. RoHS COMPLIANT

X	PLATING
0	15 µin Gold
1	30 µin Gold
2	50 µin Gold

UNLESS OTHERWISE SPECIFIED
ALL DIMENSIONS ARE INCHES [MM]
TOLERANCES: EXCEPT AS NOTED

INCHES		HOLES	
.X	± .10	Ø.X	±.10
.XX	± .020	Ø.XX	±.015
.XXX	± .015	Ø.XXX	±.010

APPROVALS		DATE
DRAWN	SS	04/15/05
CHECKED		
APPROVED		

ADAM TECH
909 Rahway Avenue, Union, NJ 07083
Phone: 908-687-5000 Fax: 908-687-5710

TITLE: MODULAR GANGED AND STACKED RJ45 RIGHT ANGLE, PCB

SIZE	PART NO.	REV.
X	MTJG-X-88JX1-FSG-PG	B

REF: | SCALE: NTS | SHEET 1 OF 1