CC-0310-10

The CF-0310-10 filter has a wide operating temperature range and is designed to sustain severe shock and vibration environments and will perform well in Mil-Std-461D, E and F test conditions.

The filter will function well with switching power supplies where a considerable amount of common mode and differential mode electrical noise is present.

The high frequency performance has been increased to beyond 1.0 GHz.

Order P/N: CC-0310-10

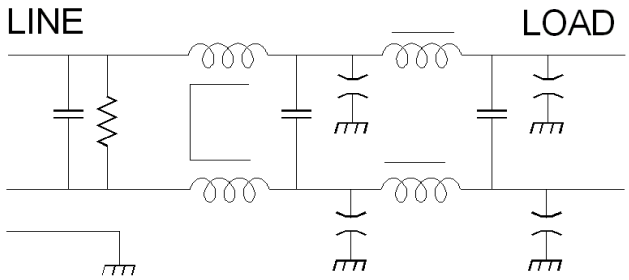

Operating Voltage = _____ 95/250 Vac
Operating Current Max = _____ 10 Amp
Operating Frequency = _____50/60 Hz @ 95/250 V
= _____ 50/400 Hz @ 95—140 V
Temperature Range = _____-40 to 50℃

Diel. Withstand (Line to Case) = _____1500 Vdc; 1 Min
Diel. Withstand (Line to Line) = _____ 1500Vdc; 1 Min
Leakage Current = _____ 1.0 mA Max @250 V /60 Hz
= _____ 3.0 mA Max @ 125 V /400Hz

Discharge Volt after 1.0 second = _____ 34 V Max

Calculated MTBF = _____2,466,608 Hrs @ 30℃ GB

INSERTION LOSS vs. FREQUENCY

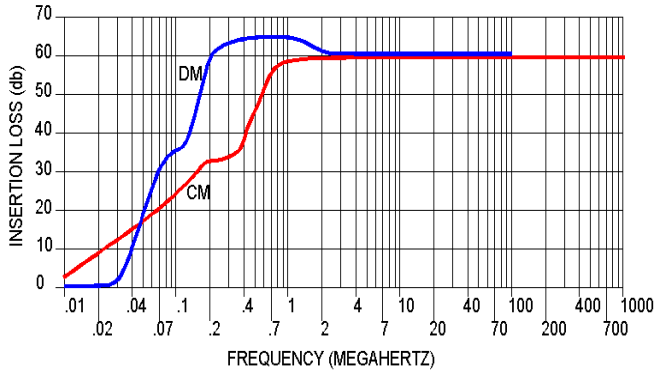

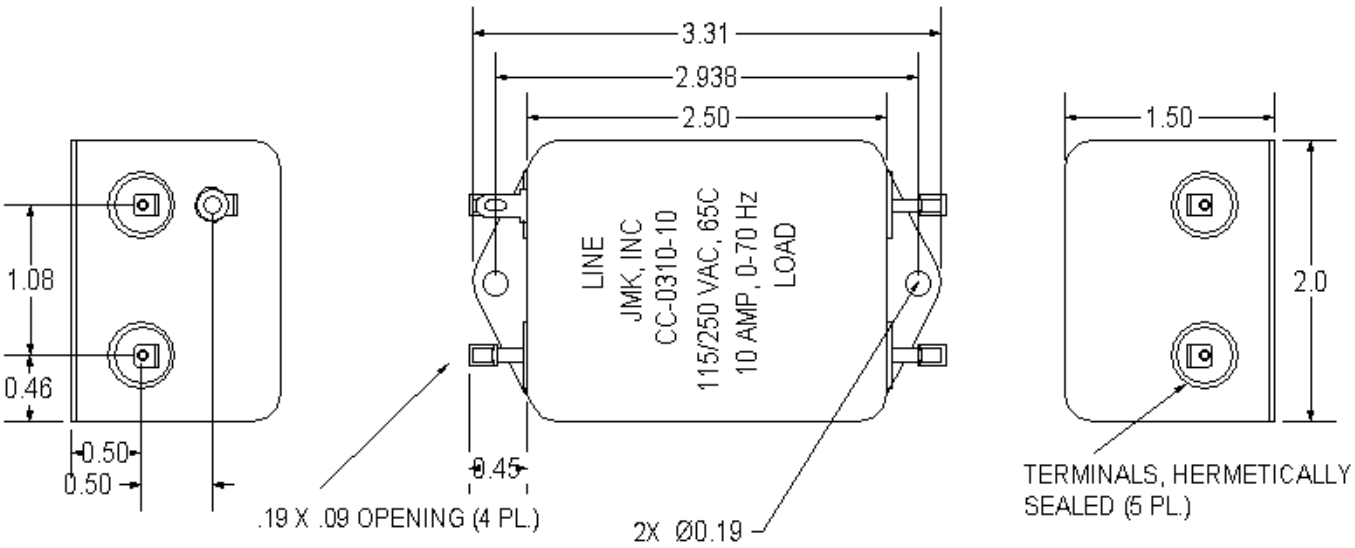

USA JMK Inc 15 Caldwell Dr. Amherst, NH 03031 PH: 603 886-4100 FX: 603 886-4115
email: info@jmkfilters.com
EUR JMK Inc Glasgow G13 1DN Scotland UK PH: 44-(0) 7785310729 Fax: 44-(0) 141 589 1884