I.D.C. Socket Dual-Row, No SR

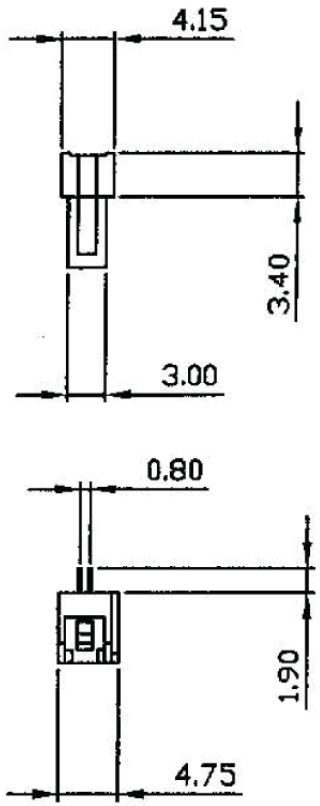

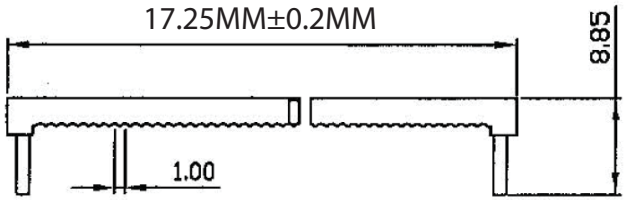

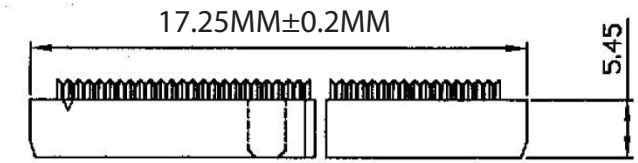

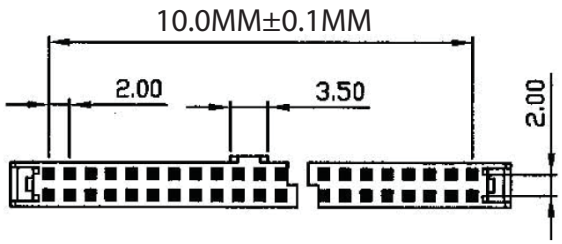

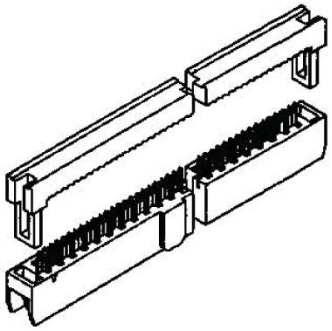

Materials:

- Insulator: P.B.T. 30% Glass Fiber, UL94V-0
- Contact Material: Phosphor Bronze
- Gold Flash over Nickel

Electrical:

- Current Rating: 1 Amp
- Insulation Resistance: 1,000MΩ Min.
- Dielectric Withstanding, 500V AC
- Operating Temperature: -55°C ~ +105°C

Unit: MM±0.3MM

RoHS Complaint

Scale	1:1							Name
TOLERANCE						Drawn	10.19.11	Chappell
X.X	±0.40					Approved		
X.XX	±0.25							
X.XXX	±0.15							
Angle	±3°							
			Modification	Date	Name			

ASSMANN WSW components

Item No.
AWP2-12-7240-T-R

Title
IDC-Socket, Pitch 2.0MM, 12 Contacts
Central Guide Lug w/o Strain Relief, Gold Flash

Drawing No.

rev00

Replace

Sheet