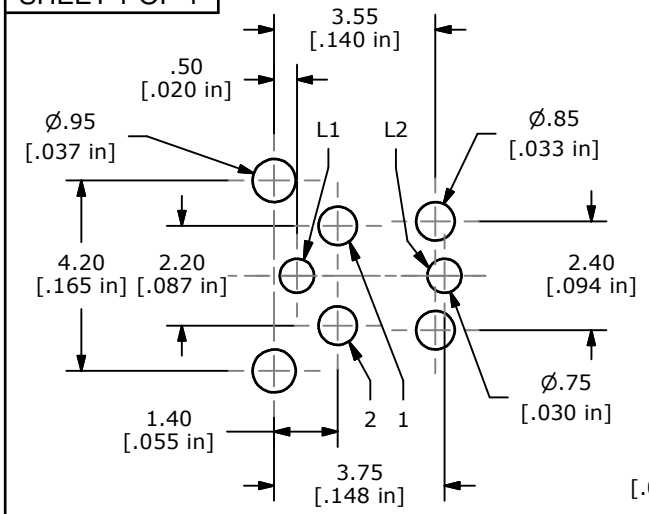

P.C.B. LAYOUT

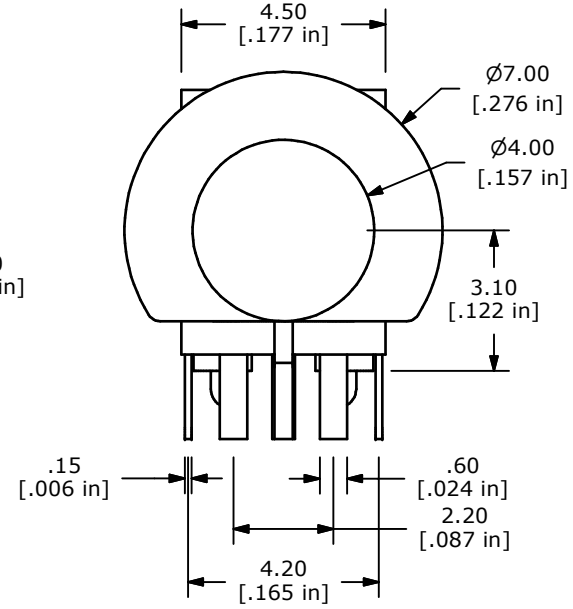

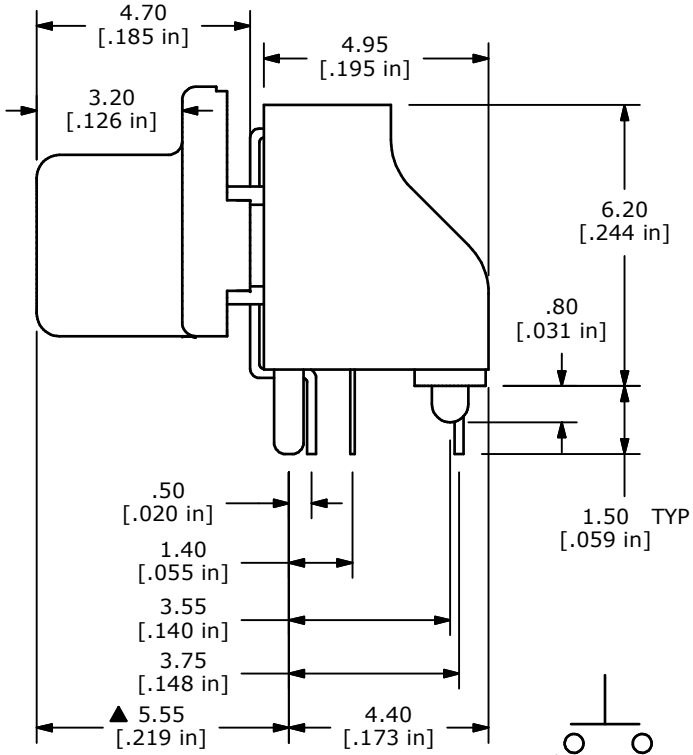

LED SPECS	UNITS	BLUE
FORWARD CURRENT	mA	20 TYP.
FORWARD VOLTAGE	V	3.0 TYP. - 3.6 MAX.
LUMINOUS INTENSITY	mcd	80 TYP.

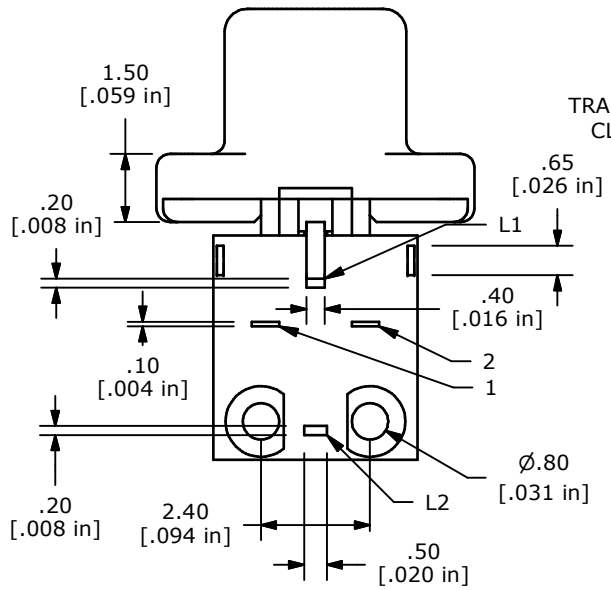

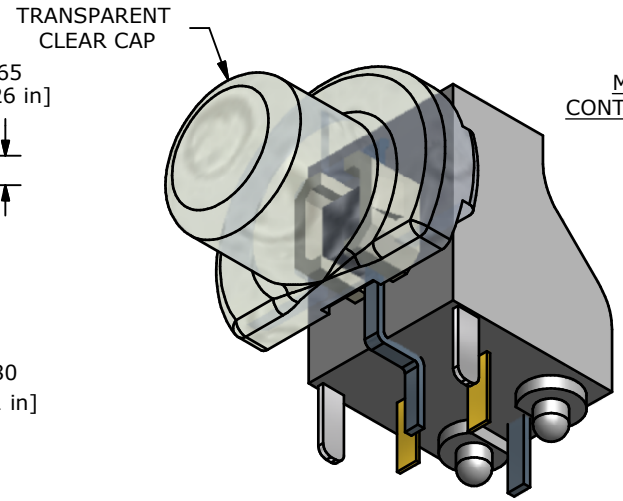

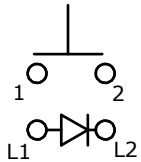

MOMENTARY SPST
CONTACT CONFIGURATION

NOTES:
1. ALL DIMENSIONS IN MM [INCH]
2. GENERAL TOLERANCE: X.X=±0.4
   X.XX=±0.25
3. RATING: 12VDC @ 50mA
4. CONTACT RESISTANCE: 500mΩ MAX.
5. INSULATION RESISTANCE: 100MΩ MIN.
▲6. OPERATING FORCE: 160± 50gf
7. TRAVEL: 0.2± 0.1mm
8. OPERATING TEMPURATURE: -40˚C TO 85˚C
9. OPEREATING LIFE: 100,000 CYCLES
▲10. LED: BLUE
11. ▲ DENOTES CRITICAL PARAMETERS
12. 2002/95/EC (ROHS) COMPLIANT
13. SWITCH TERMINAL PLATING: SILVER
14. DIELECTRIC STRENGTH: 250 VAC FOR ONE MINUTE
15. PACKAGING: 300 PIECES PER REEL

REV	PCR NO	DESCRIPTION	DATE	BY
A	21107	INITIAL RELEASE	4/17/13	EBP

THE INFORMATION CONTAINED IN THIS DOCUMENT IS PROPRIETARY
TO E-SWITCH AND IS NOT TO BE COPIED OR TRANSFERRED

E-SWITCH®

TITLE TL1270F160BLQAT

SCALE	DATE	DR	DWG	REV
	4/8/2013	EBP	N325000	A